Department of the Army
Pamphlet 73–2

Test and Evaluation

Test and Evaluation Master Plan Procedures and Guidelines

Headquarters
Department of the Army
Washington, DC
11 October 1996

Unclassified

SUMMARY of CHANGE

DA PAM 73–2
Test and Evaluation Master Plan Procedures and Guidelines

This new pamphlet implements the policies contained in Army Regulation 73-1. Specifically it--

- Provides detailed guidance and procedures on the preparation, staffing and approval of the Test and Evaluation Master Plan (TEMP) (chap 3).

- Provides Army test and evaluation responsibilities for development and staffing of the TEMP (chap 2).

- Describes criteria for determining when a TEMP is required based on programmatics (chap 1, 2).

- Describes in detail the various parts of the TEMP and provides a sample of each section to enhance preparation of the TEMP (chap 4, 5).

- Outlines the coordination/approval process and timeline that must be met by the Program Executive Office/program manager; Headquarters, Department of the Army; and the Office of the Secretary of Defense (and for theatre missile defense systems, The Ballistics Missile Defense Organization) to meet program milestone objectives (chap 3).

Headquarters
Department of the Army
Washington, DC
11 October 1996

Department of the Army Pamphlet 73–2

Test and Evaluation

Test and Evaluation Master Plan Procedures and Guidelines

By Order of the Secretary of the Army:

DENNIS J. REIMER
General, United States Army
Chief of Staff

Official:

JOEL B. HUDSON
Administrative Assistant to the
Secretary of the Army

History. This is a new Department of the Army publication. This publication has been reorganized to make it compatible with the Army electronic publishing database. No content has been changed.

Summary. This pamphlet provides guidance and procedures to implement test and evaluation policy for materiel and information systems as promulgated by AR 73-1. It provides detailed guidance on the preparation, staffing and approval of the Test and Evaluation Master Plan (TEMP).

Applicability. The provisions of this pamphlet apply to the Active Army, the Army National Guard, and the U.S. Army Reserve.

Proponent and exception authority. The proponent of this pamphlet is the Under Secretary of the Army. The Under Secretary of the Army has the authority to approve exceptions to this pamphlet that are consistent with controlling law and regulation. The proponent may delegate this authority, in writing, to a division under his or her supervision or to a division chief within the proponent office who holds the grade of colonel or the civilian equivalent.

Army management control process. Not applicable.

Supplementation. Supplementation of this pamphlet is prohibited without prior approval from the proponent of this pamphlet.

Suggested Improvements. Users are invited to send comments and suggested improvements on DA Form 2028 (Recommended Changes to Publications and Blank Forms) directly to TEST AND EVALUATION MANAGEMENT AGENCY (DACS-TE), CHIEF OF STAFF, 200 ARMY PENTAGON, WASHINGTON DC 20310-0200.

Distribution. Distribution of this publication is made in accordance with initial distribution number (IDN) 095490, for command levels D and E for the Active Army, the Army National Guard, and the U.S. Army Reserve.

Contents (Listed by paragraph and page number)

Chapter 1
Introduction, *page 1*
Purpose • 1–1, *page 1*
References • 1–2, *page 1*
Explanation of abbreviations and terms • 1–3, *page 1*

Chapter 2
General Procedures, *page 1*

Section I
Introduction, page 1
General • 2–1, *page 1*
Why a TEMP is needed • 2–2, *page 1*
Preparation of the TEMP • 2–3, *page 1*
Format • 2–4, *page 1*
Cost and Operational Effectiveness Analysis interface • 2–5, *page 1*

Section II
Non-Major Systems, page 2
Tailoring • 2–6, *page 2*

Section III
Development, page 2
Input • 2–7, *page 2*
Strawman TEMP • 2–8, *page 2*
Preliminary TEMP • 2–9, *page 2*
The OSD T&E oversight list • 2–10, *page 2*
Submission • 2–11, *page 2*

Section IV
TEMP Update, page 2
OSD T&E oversight programs • 2–12, *page 2*
Update deferral • 2–13, *page 2*

Section V
TEMP Update and Revision Procedures, page 3
Update procedures • 2–14, *page 3*
Revision procedures • 2–15, *page 3*

Section VI
Administration, page 3
Requesting delay in TEMP submittal • 2–16, *page 3*
Publication considerations • 2–17, *page 3*

Section VII
Submission, page 3
Accompanying documents • 2–18, *page 3*
Referenced documents • 2–19, *page 4*

Chapter 3
Preparation, Review, and Approval Process, *page 4*

Section I
Introduction, page 4

Unclassified

General • 3–1, *page 4*
Principal responsibilities • 3–2, *page 4*
TIWG responsibilities • 3–3, *page 4*
TIWG meeting alternatives • 3–4, *page 4*

Section II
Review and Approval Process, page 4
General • 3–5, *page 4*
Acquisition category I (ACAT I) and OSD T&E oversight materiel programs • 3–6, *page 5*
Army programs for which the Ballistic Missile Defense Organization has approval authority • 3–7, *page 5*
Multi-Service ACAT I and OSD T&E oversight materiel programs for which the Army has lead • 3–8, *page 5*
Multi-Service ACAT I and OSD T&E oversight materiel programs for which the Army is a participant • 3–9, *page 5*
Acquisition category II (ACAT II) and Army special interest materiel programs • 3–10, *page 6*
Multi-Service ACAT II programs for which the Army has the lead • 3–11, *page 6*
ACAT III and IV non-major materiel programs and class II-V information mission area programs that are not designated for OSD T&E oversight (to include multi-Service) • 3–12, *page 6*
Major Automated Information System Review Council programs requiring OSD-level review and systems on the OSD T&E oversight list • 3–13, *page 6*

Chapter 4
Format and Contents for Materiel Programs, *page 17*

Section I
Introduction, page 17
General • 4–1, *page 17*

Section II
TEMP Format and Content for Materiel Systems, page 17
Part I ("System Introduction") • 4–2, *page 17*
Part II ("Integrated Test Program Summary") • 4–3, *page 18*
Part III ("Developmental Test and Evaluation Outline") • 4–4, *page 18*
Part IV ("Operational Test and Evaluation Outline") • 4–5, *page 19*
Part V ("Test and Evaluation Resource Summary") • 4–6, *page 21*
Appendixes, annexes, and attachments • 4–7, *page 22*

Chapter 5
Format and Contents for Information Mission Area Programs, *page 38*

Section I
Introduction, page 38
General • 5–1, *page 38*

Section II
TEMP Format and Contents for Information Mission Area Systems, page 38
Part I ("System Introduction") • 5–2, *page 38*
Part II ("Integrated Test Program Summary") • 5–3, *page 39*
Part III ("Developmental Test and Evaluation Outline") • 5–4, *page 39*
Part IV ("Operational Test and Evaluation Outline") • 5–5, *page 40*
Part V ("Test and Evaluation Resource Summary") • 5–6, *page 41*
Appendixes • 5–7, *page 42*

Appendixes

A. References, *page 48*

B. Test and Evaluation Master Plan (TEMP) Checklist, *page 48*

Table List

Table 3–1: TEMP preparation responsibilities matrix, *page 6*
Table 4–1: Sample critical technical parameters matrix, *page 22*
Table 4–2: Test and Evaluation Master Plan outline (format), *page 22*
Table 4–3: TIWG members and roles, *page 23*
Table 5–1: Sample critical technical parameters matrix, *page 42*
Table 5–2: Test and Evaluation Master Plan outline (format), *page 42*
Table 5–3: TIWG members and roles (IMA programs), *page 43*

Figure List

Figure 3–1: TEMP preparation/TIWG coordination process, *page 8*
Figure 3–2: TEMP staffing and approval process, acquisition category I and OSD oversight material programs, *page 9*
Figure 3–3: TEMP staffing and approval process, Ballistic Missile Defense Organization (BMDO) Element MDAP Systems, *page 10*
Figure 3–4: TEMP staffing and approval process, acquisition category I & OSD oversight, multi-Service materiel programs, Army lead, *page 11*
Figure 3–5: TEMP staffing and approval process, acquisition category I & OSD oversight, multi-Service programs, Army participating, *page 12*
Figure 3–6: TEMP staffing and approval process, acquisition category II and Army special interest materiel programs, *page 13*
Figure 3–7: TEMP staffing and approval process, acquisition category II multi-Service materiel programs, Army lead, *page 14*
Figure 3–8: TEMP staffing and approval process, acquisition category III and IV materiel programs and class II-V information mission area programs, not designated for OSD T&E oversight (to include multi-Service), *page 15*
Figure 3–9: TEMP staffing and approval process, OSD MAISRC programs, *page 16*
Figure 4–1: Integrated test program schedule (illustrative example), *page 24*
Figure 4–2: Minimum acceptable operational performance requirements (MAOPR) matrix, *page 25*
Figure 4–3: Signature page format for ACAT I and other ACATs designated for OSD test and evaluation oversight, *page 26*
Figure 4–4: Signature page format for programs requiring BMDO approval, *page 27*
Figure 4–5: Signature page format for multi-Service ACAT I and other ACATs designated for OSD T&E oversight for which Army is the lead Service, *page 28*
Figure 4–6: Signature page format for ACAT II and Army special interest programs, *page 29*
Figure 4–7: Signature page format for multi-Service ACAT II programs for which Army is the lead Service, *page 30*
Figure 4–8: Signature page format for acquisition category III and IV programs and class II-V information mission area (IMA) programs not designated for OSD T&E oversight (to include multi-Service), *page 31*
Figure 4–9: Sample TEMP/TIWG coordination sheet, *page 32*
Figure 4–10: COIC, COEA, MAOPR, CTP, ORD crosswalk matrix, *page 33*
Figure 4–10: COIC, COEA, MAOPR, CTP, ORD crosswalk matrix—Continued, *page 34*
Figure 4–11: Critical events for integrated scheduling, *page 35*
Figure 4–11: Critical events for integrated scheduling—Continued, *page 36*
Figure 4–12: Appendix C. Points of Contact (format), *page 37*
Figure 5–1: Integrated test program schedule (illustrative example), *page 44*

Contents—Continued

Figure 5–2: Signature page format for OSD Major Automated Information System Review Committee (MAISRC) programs, *page 45*
Figure 5–3: TEMP/TIWG coordination sheet, *page 46*
Figure 5–4: Critical events for integrated scheduling (IMA programs), *page 47*

Glossary

Index

RESERVED

Chapter 1
Introduction

1–1. Purpose

Developing and fielding Army systems that achieve the required performance and operational effectiveness and suitability represent significant challenges to all involved in the system acquisition process. The procedures and guidelines in this pamphlet—

a. Apply to all systems developed and managed under the auspices of AR 70–1. These systems are referred to as materiel systems in this pamphlet. This category includes systems that contain computer hardware and software (Materiel System Computer Resources) specifically designed, configured, and acquired as an integral element of the system and needed so that the system can fully perform its mission.

b. Apply to all systems developed and managed under the auspices of AR 25–1 and AR 25–3; these systems are referred to as information mission area (IMA) systems in this pamphlet. As used in this pamphlet, the term *information system* applies to systems that evolve, are acquired, or are developed and that incorporate information technology. This pamphlet applies to all information systems of the information mission area disciplines not developed and managed under AR 70–1.

c. Provide procedural guidance to implement the policies in AR 73–1 with regard to planning, executing, and reporting testing and evaluation in support of the acquisition process. Specifically, this pamphlet provides procedural guidance in preparing, staffing, and gaining approval for Test and Evaluation Master Plans (TEMPs) for materiel and IMA systems. This pamphlet provides detailed guidance on format, content, review and approval procedures to be followed by all Army programs in preparation of the TEMP.One of the fundamental elements of the acquisition process is test and evaluation (T&E). The primary objective of T&E in support of the acquisition process is to verify that developmental and operational goals are being achieved. The structuring and execution of an effective T&E program is absolutely essential to the acquisition and fielding of Army systems which meet the user's requirements. There are many elements integral to a successful T&E program.

1–2. References

Required and related publications are listed in appendix A.

1–3. Explanation of abbreviations and terms

Abbreviations and special terms used in this pamphlet are explained in the Glossary.

Chapter 2
General Procedures

Section I
Introduction

2–1. General

All acquisition programs are supported by an acquisition strategy (AS) reflecting a comprehensive and efficient T&E program. To accomplish this task, each acquisition program or system will have a single TEMP. All programs require a TEMP except level VI information systems and drugs and vaccines that fall under parts 50, 56 and 312, title 21, of the Code of Federal Regulations (see AR 73–1, para 7–4*b*).

2–2. Why a TEMP is needed

The TEMP is the basic planning document for all life cycle T&E that are related to a particular system acquisition and is used by all decision bodies in planning, reviewing, and approving T&E activity. Drafters should therefore remain aware that the TEMP is a planning mechanism that is required before they proceed to the next acquisition milestone. In addition, the approved TEMP is the basic reference document used by the T&E community to generate detailed T&E plans and to ascertain schedule and resource requirements associated with the T&E program. Since the TEMP charts the T&E course of action during the system acquisition process, all testing that impacts on the program decisions is outlined in the TEMP.

2–3. Preparation of the TEMP

The TEMP is prepared by the program manager (PM) (understood to include project manager and product manager) in conjunction with principal Test Integration Working Group (TIWG) members and approved by the appropriate TEMP approval authority. When under time and urgency constraints, the PM can prepare a strawman TEMP to be finalized by the TIWG. The TEMP checklist provided as appendix B to this pamphlet may be used as a guide for TEMP development and preparation.

a. The TEMP is a summary document showing who, what, where, when, why, and how the critical technical parameters and critical operational issues will be tested and evaluated. An approved TEMP is required for an Outline Test Plan (OTP) to be included in the Five Year Test Program (FYTP).

b. The TEMP addresses the T&E to be accomplished in each planned program phase with the next phase addressed in the most detail. When developmental testing (DT) and operational testing (OT) are combined, the TEMP will separately address the two different categories of test. Part III of the TEMP presents the development test and evaluation (DT&E) portion of the DT/OT test. Part IV ("Operational Test and Evaluation Outline") will detail the operational test and evaluation (OT&E) portion of the DT/OT test.

c. The basic content of a TEMP should not exceed 30 pages, including pages for figures, tables, matrices, and so forth. In addition, appendix A ("Bibliography"), appendix B ("Acronyms"), and appendix C ("Points of Contact") are excluded from the 30– page limit, as are any annexes. The size of appendixes and annexes should be kept to a minimum.

d. When a program consists of a collection of individual systems performing a common function, using a common capability, or performing a collective function, a "Capstone" TEMP, integrating the test and evaluation program planned for the entire system, is required. A Capstone TEMP should not exceed 30 pages, including pages for figures, tables, matrices, and so forth. Each individual system TEMP annexed to the Capstone TEMP is to follow the basic content of a TEMP and should not exceed 30 pages.

2–4. Format

Army policy requires that DOA 5000.2–M format be followed for all programs requiring a TEMP. Within this format the level of detail is unique for each program. Tailoring of TEMP contents within this format is particularly encouraged for programs not requiring Army Secretariat or Office, Secretary of Defense (SOD), -level approval. The level of detail required for any TEMP is directly related to the approved T&E strategy and the complexity of the T&E effort needed to verify attainment of technical performance, technical specifications, objectives, safety, and supportability and is necessary to support the evaluation and assessment of the operational effectiveness and operational suitability of the system. It is *not directly related* to the size of the program. The content guidance contained in the following chapters is intended to assist the TIWG organizations and the TEMP approval authority in developing a TEMP that reflects an adequate and efficient T&E program. These content guidelines should not be viewed as a rigid template for all programs.

2–5. Cost and Operational Effectiveness Analysis interface

In a memorandum dated 21 February 1992 (subject: Implementation Guidelines for relating Cost and Operational Effectiveness Analysis (COEA) Measures of Effectiveness (MOEs) to Test and Evaluation), OSD policy contained in DOD Instruction (DODI) 5000.2 is emphasized regarding the need to maintain linkage between the COEA and

test and evaluation, particularly between the measures of effectiveness (MOEs) and the performance parameters that define the military utility of a system. Chapter 4 contains guidance for TEMP parts I, III, and IV implementing this policy.

Section II
Non-Major Systems

2–6. Tailoring

Tailoring guidelines for TEMPs not requiring Army Secretariat or OSD approval (generally acquisition category (ACAT) III or IV materiel, and class II-V IMA programs) are addressed throughout this volume.

a. The general format in DOD 5000.2–M must be followed; however, tailoring is allowed to reduce development effort and minimize the size of the TEMP.

b. Guidance includes a tailored review and approval process.

(1) Paragraph 3–4 of this pamphlet describes a coordination process for obtaining TIWG concurrence that allows use of video teleconference and mail or facsimile coordination to obtain TIWG member signatures.

(2) Paragraph 3–11 describes a unique staffing and approval process.

(3) The revision process described in paragraph 2–13 applies only to TEMPs that are forwarded for Army Secretariat or OSD approval.

c. Guidance for tailoring parts I, II, and III for materiel system TEMPs follows:

(1) *Part I ("System Introduction").* In paragraph c ("Minimum Acceptable Operational Performance Requirements"), it is sufficient to reference the Operational Requirements Document (ORD).

(2) *Part II ("Integrated Test Program Summary").* The schedule format (para 4–2) does not have to be rigidly followed. A program schedule can be used as long as test events are identified. Funding information is optional. Responsibilities of the TIWG member do not have to be described in detail. Referencing the charter is sufficient.

(3) *Part III ("Developmental Test and Evaluation Outline").* Most ACAT III and IV programs will not undergo formal live fire test unless they meet the definition of a major covered program or major munitions as described in the Live Fire Test and Evaluation Guidelines. For these programs, paragraph d ("Live Fire Test and Evaluation") is not applicable. This should not be confused with gun firing or armor plate tests and so forth that are needed to validate the vulnerability/lethality requirements of the system.

Section III
Development

2–7. Input

Input to the TEMP is appropriate test and evaluation information that is deemed necessary to ensure requirements outlined from the ORD are being addressed or have been satisfied. Input to the TEMP is primarily provided by the program manager/materiel developer/IMA system developer, developmental tester, developmental evaluator or assessor, operational tester, operational evaluator, combat developer/functional proponent, survivability/lethality analyst, and logistician. See DA Pamphlet (Pa) 73–1, chapter 8, for TIWG composition, roles, and functions. Other Government and contractor activities may also provide input to the TEMP, when appropriate. All inputs are integrated into the TEMP by the program manager, who has primary responsibility for preparation, staffing, and update of the TEMP. The TIWG executes a TEMP coordination sheet that accompanies the TEMP when forwarded for TEMP decision authority approval. A TEMP signature page is executed by the submitter, reviewers, and approval authority.

2–8. Strawman TEMP

When circumstances warrant (for example, an accelerated acquisition), a strawman TEMP can be prepared by the program manager for review and discussion at the initial TIWG meeting. The strawman TEMP should be provided to the TIWG members at least 30 days prior to the TIWG meeting. A strawman TEMP can be used to facilitate T&E strategy discussions and the development of the preliminary TEMP.

2–9. Preliminary TEMP

For preliminary TEMPs, that is, those submitted and approved to support milestone (MS) I, information not yet available should be so noted. The date or event identified when information will be known should also be noted. The TEMP should be updated when the information becomes available.

2–10. The OSD T&E oversight list

The OSD T&E oversight list is jointly published on an annual basis by the Director, Operational Test and Evaluation (DOT&E), and the Director, Test and Evaluation (D,T&E), Office of the Under Secretary of Defense (Acquisition and Technology)(OUSD(A&T)). The oversight programs require OSD TEMP approval and forwarding of T&E documentation to OSD. For programs other than ACAT I programs designated for the OSD T&E oversight list, a preliminary TEMP is due to OSD within 90 days of designation. These preliminary TEMPs will be final TEMPs for programs in the Demonstration-Validation acquisition phase.

2–11. Submission

Army policy requires that TEMPs submitted to OSD comply with the milestone documentation submission schedule and be Army approved prior to submission. Under DODI 5000.2, programs subject to Defense Acquisition Board (DAB) review must submit the TEMP to OSD 45 days prior to the DAB committee review. Programs on the OSD T&E oversight list that are subject only to internal Army review, that is, ACAT IC, II, III, and IV, must submit the TEMP to OSD 45 days prior to the milestone review. An additional 20 days are needed for Headquarters, Department of the Army (HQDA), and Army Materiel Command (AMC) staffing and approval of the Deputy Under Secretary of the Army for Operations Research (DUSA(OR)) prior to submission to OSD. Programs subject to Ballistics Missile Defense Organization (BMDO) coordination and approval require an additional 21 days or less for BMDO staffing after DUSA(OR) approval and prior to submission to OSD.

Section IV
TEMP Update

2–12. OSD T&E oversight programs

For OSD T&E oversight programs, when development is complete and critical operational issues are satisfactorily resolved, including the verification of deficiency correction, a TEMP update is no longer required. If any of the attributes listed in paragraph 2–11 apply, a request to delete the program from the OSD T&E oversight list should be prepared by the PM/materiel developer/IMA system developer and forwarded through the program executive officer (PEO) (or developing agency if not a PEO- managed program) to the U.S. Army Test and Evaluation Management Agency (TEMA) for forwarding to the D,T&E and D,OT&E for approval. For BMDO programs, the request must be sent to the BMDO acquisition executive by TEMA for forwarding to the OSD for approval. The request must be coordinated with Headquarters of the Training and Doctrine Command (TRADOC), Operational Test and Evaluation Command (OPTEC), and the Army Materiel Systems Analysis Activity (AMSAA) (or the Test and Evaluation Command (TECOM) as the developmental independent evaluator/assessor and AMSAA as the logistician if the program is a TECOM-assessed program) before forwarding to TEMA.

2–13. Update deferral

For programs not on the OSD T&E oversight list, when development is complete and critical operational issues are satisfactorily resolved, including the verification of deficiency correction, a TEMP update is no longer required. A request to defer further

updates should be prepared by the PM or designated system manager, coordinated with the TIWG, and approved by the TEMP approval authority. Approval should be made a matter of record. Programs possessing the following attributes may no longer require a TEMP update to be submitted:

a. A fully deployed system with no operationally significant product improvements or block modification efforts.

b. Full production ongoing, fielding initiated with no significant deficiencies observed in production qualification test results.

c. A partially fielded system in early production phase, having successfully accomplished all DT and OT objectives.

d. Programs for which planned T&E is only a part of routine aging and surveillance testing, service life monitoring, or tactics development.

e. Programs for which no further OT or live fire test (LFT) is required by the Army, Joint Chiefs of Staff (JCS), or the OSD.

f. Programs for which future testing (for example, product improvements or block upgrades) has been incorporated in a separate TEMP (for example, an upgrade TEMP).

Section V
TEMP Update and Revision Procedures

2–14. Update procedures

A TEMP update is required to support milestone reviews at program baseline breach or, on occasion, when the program has changed significantly. The update can be in the form of a complete rewrite of the document, page changes, or a memorandum indicating "no change." Page changes are the preferred approach when appropriate because they reduce the effort to review the TEMP, resulting in a speedier review and approval process. Page changes will be submitted as "remove-and-replace" changed pages, so as not to affect the integrity of the basic document. Coordination and approval of the update is done according to the review and approval procedures appropriate for the acquisition category and TEMP approval authority of the program.

a. Coordination and approval is recorded by executing a TIWG coordination sheet and a TEMP signature page appropriate for the program. Signatures can be obtained via facsimile.

b. The initial submission date and the current update number and date will be shown on the TEMP cover, the TIWG coordination sheet, and signature page.

c. Changes made to an approved TEMP will be annotated by change bars in the outside margin of changed pages. A synopsis of why specific changes were made will accompany the update. When page changes are used, each changed page will footnote the current date and change number.

d. A rewritten TEMP does not require changes to be noted by change bars but should be accompanied by a synopsis of why changes were made.

e. When used for ACAT I and II and other ACATs designated for the OSD T&E oversight list as well as Army and OSD Major Automated Information Systems Review Council (MAISRC) programs, the "no change" memorandum is prepared by the program manager, coordinated fully, and forwarded to TEMA for DUSA(OR) approval and forwarding to OSD, as appropriate. Both the TIWG coordination sheet and the TEMP signature page will be executed and forwarded as enclosures to the no change memorandum.

2–15. Revision procedures

A TEMP revision is required to address comments received during the review and approval process subsequent to TIWG concurrence. T and Evaluation Master Plans for ACAT III and IV and IMA class V programs are not subject to the procedures for revision except when they are on the OSD T&E oversight list or when senior management's objections reverse the TIWG member concurrence. A revision is generally in the form of page changes, although a complete rewrite of the document may be required if the changes are so substantial that page changes are not practical. Page changes will be submitted as remove-and-replace changed pages so as not to affect the integrity of the basic document. Coordination and approval of the revision is according to the approval procedures appropriate for the acquisition category and TEMP approval authority of the program.

a. For all revisions, TIWG members will be provided a copy of the changes for comment or concurrence to ensure changes are acceptable. Verbal concurrence will be provided by all principal TIWG members and recorded by the TIWG chairman. Verbal concurrence will be followed by a newly signed TIWG coordination sheet. The intent of the verbal concurrence is to expedite TIWG level TEMP concurrence. Signatures can be obtained via facsimile on separate pages for retention by the TIWG chairman.

b. A new TEMP signature page will be executed by the PM, PEO (or developing agency), HQ of TRADOC (or functional proponent for IMA systems), and OPTEC for all revisions resulting from HQDA and OSD review.

c. The TEMP signature page will show the date of the initial submission, the update number and date (if applicable), and the revision number and date as shown on the signature page format (see para 4–1*b*).

d. Changes made to the TEMP will be annotated by change bars in the outside margin of changed pages. A brief synopsis of how issues and comments were addressed and/or why specific changes were made will accompany the revision. Each changed page will footnote the revision number and current date.

e. A completely rewritten TEMP does not require changes to be noted by change bars but should be accompanied by a brief synopsis of how issues and comments were addressed and/or why specific changes were made to the TEMP.

f. The revision will be forwarded by memorandum to TEMA for HQDA review and DUSA(OR) approval and forwarding to OSD, as necessary. The memorandum will record that TIWG member concurrence was obtained and will enclose the properly executed TEMP signature page.

Section VI
Administration

2–16. Requesting delay in TEMP submittal

The request for delay for ACAT I and II, MAISRC programs requiring OSD approval, and all programs designated for OSD T&E oversight is prepared by the program manager and forwarded for approval to the TEMP approval authority. The reason for the delay must be clearly explained. Delays for administrative reasons are generally not accepted. The request for delay will be forwarded to TEMA for forwarding to OSD or DUSA(OR) approval, as necessary. For programs requiring BMDO approval, TEMA will submit a request for delay to BMDO for approval or to OSD if OSD approval is required.

2–17. Publication considerations

If bound, copies of TEMPs must allow for easy insertion of page changes; spiral, stapled or glued bindings are not acceptable. The program manager is responsible for providing the number of copies needed for HQDA and OSD staff review. The quantity needed is identified in chapter 3. The TEMPs submitted for HQDA and OSD approval must contain all classified data and appendixes and annexes.

Section VII
Submission

2–18. Accompanying documents

a. For all TEMPs requiring OSD approval, three copies of the approved Mission Need Statement (MNS), ORD, and validated System Threat Assessment Report (STAR) will be forwarded with the TEMP.

b. For information mission area systems, the document(s) to be forwarded are the MNS; the functional description (FD), when requested; and the STAR, if the STAR is prepared for the system.

c. Those TEMPs not requiring OSD approval should be accompanied by an approved MNS, ORD or FD, and System Threat Objective (STO), as appropriate. If these support documents are final and have not changed since the last TEMP submission, a statement will accompany the TEMP attesting to that fact; copies of the documents need not be forwarded. The statement should cite the date, version and/or change number for the most current documents.

2–19. Referenced documents

All documents referenced in the TEMP must be available for submission to Headquarters, Department of the Army (HQDA), or OSD on request.

Chapter 3
Preparation, Review, and Approval Process

Section I
Introduction

3–1. General

Development of the TEMP begins with the establishment and chartering of the TIWG by the materiel developer (MATDEV/IMA SYS DEV) for the initial TEMP during the Concept Exploration and Definition phase. The TIWG charter will identify the role and responsibilities of all agencies participating in T&E. See AR 73–1 and DA Pam 73–1, chapter 8, for details, an example of specific responsibilities, and a sample of the TIWG charter. These TIWG specific responsibilities are aligned with the various parts of the TEMP as shown in table 3–1.

3–2. Principal responsibilities

The program manager ultimately has the final responsibility to produce the TEMP. The ideal method to develop a TEMP is for a concurrent TEMP development by the program manager, the developmental evaluator, the developmental tester, the operational evaluator, the operational tester and the combat developer/functional proponent. On small programs or programs with tight schedules, it is often necessary for the program manager to develop the first draft strawman TEMP with minimal or no input from other agencies. That input will come during the review cycle when the TEMP is staffed for concurrences. The responsibilities to maintain TEMP currency and the interface between TIWG members by TEMP paragraph are generally as shown in table 3–1.

a. Program manager: prepare part I ("System Introduction"), part II ("Integrated Test Program Summary"), portions of part III ("Developmental Test and Evaluation Outline"), documenting tests that provide information directly to the sponsor, for example contractor tests, and part V ("Test and Evaluation Resource Summary").

b. Combat developer: provide the "Minimum Acceptable Operational Performance Requirements" in part I and input to part V, in particular, "Manpower/Personnel Training Requirements" and provide the "Critical Operational Issues and Criteria (COIC)," part IV ("Operational Test and Evaluation Outline"). Identify requirements for follow-on test and evaluation (FOT&E) and provide inputs on force development testing and experimentation (FDTE), Concept Evaluation Program (CEP), and battle lab experimentation for inclusion in part IV.

c. Independent developmental evaluator/assessor and developmental tester: provide part III and input to part V.

d. Independent operational evaluator and operational tester: provide part IV and input to part V.

3–3. TIWG responsibilities

The program manager has overall responsibility to develop the TEMP to include establishing the schedule for development. An early TIWG meeting should be held, possibly in conjunction with a review of the draft ORD/IMA systems requirements document, to familiarize TIWG members with the preliminary system requirements. This meeting is used to assist the program manager in developing the T&E strategy to be incorporated into the acquisition strategy and to ensure that all appropriate TIWG members are identified. The program manager will provide the available requirements documentation, draft acquisition strategy (with the T&E strategy incorporated), and other pertinent program documentation at this time. The TIWG members should be tasked to draft their respective portions of the TEMP. The initial draft submission should take no more than 30 calendar days for input to the program manager.

a. The TEMP input received from the TIWG members is assembled by the program manager and the consolidated document is sent for review to all TIWG members within 15 calendar days. An additional 30 calendar days is allowed for the TIWG member to staff the TEMP within the member's organization to ensure complete organizational concurrence. Issues identified during organization review and recommended changes should be forwarded to the program manager (TIWG chair) and other TIWG members prior to the TIWG. Issues should be discussed and resolved at the TIWG. Electronic coordination/review is encouraged to help meet the tight review times. The Test and Evaluation Community Network (TECNET) and/or local area nets connected via the Defense Data Network (DDN) are available to accomplish the coordination.

b. The TIWG members represent their organization and shall have the authority to concur in the TEMP for their organization. They also have an obligation to participate in the TIWG meeting unless the agenda does not include topics in which they have a direct interest.

c. It is particularly critical for TIWG members to inform the PM well in advance of the TIWG of any issues that would prevent concurrence in the TEMP. There is little value in convening a TIWG for the purpose of concurring in a TEMP if the TIWG members cannot concur because of issues with its content.

d. Issues not resolved to the satisfaction of the TIWG members are elevated through their chain of command. If not resolved, the issues are brought to the attention of the DUSA(OR) for resolution. This applies to both materiel and IMA systems in all ACATs and classes.

e. The TEMP development and TIWG coordination process is depicted in figure 3–1.

3–4. TIWG meeting alternatives

It is not necessary to conduct a TIWG meeting only to obtain TEMP concurrence signatures. The complexity and scope of T&E for ACAT I and II programs often warrants the travel time and effort associated with a TIWG meeting. The ACAT III and IV level and IMA class II-V programs may forgo the convening of a TIWG meeting and conduct TIWG business by video teleconference with TEMP coordination via mail. The complexity of the T&E program should dictate the TIWG level of effort and the need for face-to-face discussions. Means available to facilitate discussion and coordination are—

a. Video teleconference (VTC). A video teleconference is normally limited to 1–2 hours of broadcast time and is good for disseminating information and reviewing the status of comments requiring changes to the TEMP (not suitable for page by page TEMP review).

b. Mail and facsimile coordination. Mail ands facsimile coordinations are viable ways to obtain TEMP concurrence when the T&E program is straightforward and noncontroversial. A concerted effort is required by all TIWG members to forward concurrences to the PM.

Section II
Review and Approval Process

3–5. General

Once the TEMP has the concurrence of all the TIWG members, the TEMP is submitted for principal signatory review and approval. This review and approval process differs depending on TEMP approval authority. Changes required to the TEMP as a result of

review must be restaffed with the TIWG and other principal signatories. Restaffing time must be held to a minimum, that is, no more than 15 calendar days. The TEMP checklist provided as appendix B to this pamphlet may be used as a guide during the TEMP review and approval process.

3–6. Acquisition category I (ACAT I) and OSD T&E oversight materiel programs

a. The program manager signs in the "submitted by" signature block and forwards the TEMP to the PEO (or developing agency if not under PEO structure) for concurrence.

b. The PEO or developing agency forwards the TEMP *concurrently* to HQ of TRADOC and to OPTEC for concurrence. This coordination process should take no more than 30 calendar days and will supplement the coordination accomplished at the TIWG level.

c. The PEO forwards an original and 15 copies of the fully coordinated TEMP to the Test and Evaluation Management Agency (TEMA) for HQDA staffing and approval by the DUSA(OR). One copy of the MNS, STAR, and ORD should be forwarded or else a statement of currency should be forwarded if documents were previously submitted and are still current. This coordination process should take no more than 20 calendar days.

d. Upon Army approval, the PEO provides an additional 15 copies to TEMA for forwarding by the DUSA(OR) to the D,T&E for review and OSD approval. Also, the PEO provides three copies of the MNS, STAR, and ORD—or a statement of currency if documents were previously submitted with the TEMP to OSD and are still current.

e. A TEMP is approved when signed by the DOT&E and D, T&E. The OSD objective is to provide formal approval or comments and suggested TEMP modifications within 45 calendar days of receipt.

f. The OSD approval memorandum and signed TEMP signature page are forwarded by TEMA to the PEO or developing agency for inclusion in the TEMP and distribution.

g. This process is reflected at figure 3–2.

h. The signature page format is shown in chapter 4.

3–7. Army programs for which the Ballistic Missile Defense Organization has approval authority

a. The program manager signs in the "submitted by" signature block and forwards the TEMP to the PEO Missile Defense for concurrence.

b. The PEO Missile Defense forwards the TEMP concurrently to HQ of TRADOC, OPTEC, and the U.S. Army Space and Strategic Defense Command (USASSDC) for concurrence. This coordination process should take no more than 30 calendar days and supplement the coordination accomplished at the TIWG level.

c. The PEO Missile Defense forwards an original and 15 copies of the TEMP to TEMA for HQDA staffing and approval by the DUSA(OR). One copy of the MNS, STAR, and ORD should be forwarded—or a statement of currency if documents were previously submitted and are still current. This coordination process should be accomplished within 20 calendar days.

d. Upon Army approval, the PEO Missile Defense forwards an original and 25 copies of the Army-approved TEMP to the BMDO program integrator (PI). The PI also provides two copies of the MNS, STAR, and ORD—or a statement of currency if documents were previously submitted with the TEMP to OSD and are still current. The PI, through the BMDO Test and Evaluation Directorate, obtains BMDO review and approval. This coordination process should take no more than 21 days.

e. Upon BMDO approval, the BMDO Test and Evaluation Directorate forwards 15 copies to the D,T&E and the D,OT&E for review and approval. The BMDO also provides two copies of the MNS, STAR, and ORD—or a statement of currency if documents were previously submitted with the TEMP to OSD and are still current.

f. The TEMP is approved when signed by the D,OT&E and D, T&E. The OSD objective is to provide formal approval or comments and suggested TEMP modifications within 45 calendar days of receipt.

g. The OSD approval memorandum and signed TEMP signature page are forwarded to the BMDO PI for inclusion in the TEMP and final distribution.

h. This process is illustrated at figure 3–3.

i. The signature page format is shown in chapter 4.

3–8. Multi-Service ACAT I and OSD T&E oversight materiel programs for which the Army has lead

a. The program manager signs in the "submitted by" signature block and forwards the TEMP to the PEO (or developing agency if not under PEO structure) for concurrence.

b. The PEO or developing agency forwards the TEMP *concurrently* to HQ of TRADOC, OPTEC, and the participating Service operational test agencies and participating Service PEO or developing agency and user representative for concurrence. This coordination process should take no more than 30 calendar days, and supplements the coordination accomplished at the TIWG level.

c. The PEO or developing agency provides copies of the TEMP, an original and 15 copies plus 1 for each participating Service of the TEMP, to TEMA for HQDA staffing and other Service approval. The PEO or developing agency also provides one copy of the MNS, STAR, and ORD—or a statement of currency if documents were previously submitted and are still current. This coordination process should be accomplished within 20 calendar days. The TEMP is then submitted for approval by the DUSA(OR).

d. Upon approval, the PEO or developing agency provides 15 copies of the approved TEMP to TEMA for forwarding by the DUSA(OR) to the D,T&E for review and OSD approval. The PEO or developing agency also provides two copies of the MNS, STAR, and ORD—or a statement of currency if documents were previously submitted with the TEMP to OSD and are still current.

e. The TEMP is approved when signed by the D,OT&E and D, T&E. The OSD objective is to provide formal approval or comments and suggested TEMP modifications within 45 calendar days of receipt. Each participating Service receives a copy of the OSD memorandum.

f. The OSD approval memorandum and signed TEMP signature page are forwarded by the DUSA(OR) to the PEO for inclusion in the TEMP and distribution.

g. This process is illustrated at figure 3–4.

h. The signature page format is shown in chapter 4. If there is more than one participating Service or agency, a separate signature page for each Service/agency should be prepared. The signature page should include the signature block for the Service/Agency PEO, the user representative, the Operational Test Agency, and the TEMP approval official of the Service or agency. The TEMP approval official for the Air Force is the Assistant Secretary of the Air Force (Acquisition); for the Navy the TEMP approval official is the Assistant Secretary of the Navy (Research, Development and Acquisition).

3–9. Multi-Service ACAT I and OSD T&E oversight materiel programs for which the Army is a participant

a. The TEMP is prepared according to lead Service or agency procedures. Army-unique COICs can be provided for inclusion as an annex to the TEMP when required per DOD 5000.2–M.

b. The lead Service program manager forwards the TIWG (or equivalent) concurred-in TEMP to the lead Service PEO for concurrence. The lead Service PEO sends the TEMP to the Army PEO or developing agency for signature and to secure concurrence of OPTEC and HQ of TRADOC on the signature page. For those multi-Service programs where a separate Army TIWG is convened and TEMP coordination is documented on a TIWG coordination sheet, the responsible Army PEO or PM should forward the TIWG concurrence to TEMA to support HQDA review and approval by the DUSA(OR).

c. The lead Service provides the TEMP to TEMA for HQDA

staffing and approval by the DUSA(OR). This coordination process must be accomplished within 20 calendar days.

d. The Army-approved TEMP is returned by the DUSA(OR) to the lead Service.

e. The TEMP is forwarded by the lead Service acquisition executive to the D,T&E for review and OSD approval.

f. The OSD-approved TEMP is distributed by the lead Service PEO. Each participating Service receives a copy of the OSD memorandum.

g. This process is illustrated at figure 3–5.

3–10. Acquisition category II (ACAT II) and Army special interest materiel programs

a. The program manager signs in the "submitted by" signature block and forwards the TEMP to the PEO (or developing agency if not under PEO structure) for concurrence.

b. The PEO or developing agency forwards the TEMP concurrently to HQ of TRADOC and OPTEC for concurrence. This coordination process should take no more than 30 calendar days and supplement the coordination accomplished at the TIWG level.

c. The PEO or developing agency provides an original and 15 copies of the TEMP to the TEMA for HQDA staffing and approval by the DUSA(OR).

d. The Army-approved TEMP is returned to the PEO or developing agency for distribution.

e. This process is illustrated at figure 3–6.

f. The signature page format is shown in chapter 4.

3–11. Multi-Service ACAT II programs for which the Army has the lead

a. The program manager signs in the "submitted by" signature block and forwards the TEMP to the PEO (or developing agency if not under PEO structure) for concurrence.

b. The PEO or developing agency forwards the TEMP concurrently to HQ of TRADOC and OPTEC and to the participating Service operational test agencies, participating Service PEO, or developing agency and user representative for concurrence. This coordination process should take no more than 30 calendar days and supplement the coordination accomplished at the TIWG level.

c. The PEO or developing agency provides copies of the TEMP, an original and 21 copies plus 1 for each participating Service, to TEMA for HQDA staffing and other Service approval. The TEMP is then submitted for approval by the DUSA(OR).

d. The DUSA(OR)-approved TEMP is returned to the PEO or developing agency for distribution.

e. This process is illustrated at figure 3–7.

f. The signature page format is shown in chapter 4.

3–12. ACAT III and IV non-major materiel programs and class II-V information mission area programs that are not designated for OSD T&E oversight (to include multi-Service)

a. The members of the TIWG should staff the TEMP within their organization to ensure complete review and concurrence during the initial 30–day TEMP review period. Substantive issues should be surfaced and resolved at the TIWG. A concurrence from a TIWG member constitutes organization concurrence.

b. Approval is held in abeyance pending TIWG member senior management review. The review period for ACAT III and class II-V IMA is 20 working days and, for ACAT IV is 10 working days after concurrence by an organization's TIWG member. On expiration of the review period, the TEMP approval authority signs the TEMP as approved and executable, provided no objections are received from TIWG organizations. The TEMP approval authority is the milestone decision authority.

c. A TIWG member organization can reverse its concurrence within the designated review period by providing written notice of nonconcurrence signed by senior management. The notice is to be sent to the program manager.

d. This process is illustrated in figure 3–8.

e. The signature page format is shown in chapter 4.

3–13. Major Automated Information System Review Council programs requiring OSD-level review and systems on the OSD T&E oversight list

a. The program manager signs in the "submitted by" signature block and forwards the TEMP to the PEO (or developing agency if not under PEO structure) for concurrence.

b. The PEO or developing agency forwards the TEMP to OPTEC and the proponent/functional agency or HQ of TRADOC for theater/tactical systems for concurrence. This coordination process should take no more than 30 calendar days.

c. The PEO or developing agency forwards the original and all necessary copies of the fully coordinated TEMP to TEMA for HQDA staffing and approval by the DUSA(OR). The number of copies required will be determined in coordination with TEMA.

d. On approval, the TEMP is forwarded by the DUSA(OR) to the D,T&E for review and OSD approval.

e. This process is illustrated at figure 3–9 for OSD MAISRC and IMA systems on the OSD T&E oversight list.

f. The signature page format for OSD MAISRC and IMA systems on the OSD T&E oversight list is shown in chapter 5.

Table 3–1
TEMP preparation responsibilities matrix

TEMP Part/Paragraph	PM	CD/FP	TI	IDE	DT	IOE	OT	LOG
Part I System Introduction								
a. Mission Description	P	S						
b. System Threat Assessment	S		P					
c. Min Acceptable Operational Performance Requirements		P						S
d. System Description	P	S						
e. Critical Technical Parameters	S	S		P		S		S
Part II Integrated Test Program Summary								
a. Integrated Test Program Schedule	P			S	S	S	S	
b. Management	P	S		S	S	S	S	S
Part III Developmental Test and Evaluation Outline								
a. Developmental Test and Evaluation Overview	S			P	S			S
b. Developmental Test and Evaluation to Date	S			P	S			S
c. Future Developmental Test and Evaluation	S			P	S			S
d. Live Fire Test and Evaluation	S			P	S			
Part IV Operational Test and Evaluation Outline								

Table 3–1
TEMP preparation responsibilities matrix—Continued

TEMP Part/Paragraph	PM	CD/FP	TI	IDE	DT	IOE	OT	LOG
a. Operational Test and Evaluation Overview						P	S	S
b. Critical Operational Issues		P				S		
c. Operational Test and Evaluation to Date		S				P	S	
d. Future Operational Test and Evaluation		S				P	S	S
Part V Test and Evaluation Resource Summary								
a. Test Articles	S			P	S	P	S	S
b. Test Sites and Instrumentation	P	S		S	P	S	P	S
c. Test Support	S		S		P		P	S
d. Threat Systems/Simulators	S		S		P	S	P	
e. Test Targets and Expendables	P		S		P		P	
f. Operational Force Test Support					S	S	P	
g. Simulations, Models and Testbeds				P	S	P	S	
h. Special Requirements	S			P	S	P	S	
i. T&E Funding Requirements	P			S	P	P	S	
j. Manpower/Personnel Training		P			P		P	S
Appendix A Bibliography	P	S	S	S	S	S	S	S
Appendix B Acronyms	P	S	S	S	S	S	S	S
Appendix C Points of Contact	P	S	S	S	S	S	S	S
Annexes / Attachments	P							

Notes:
P: Principal Responsibility
PM: Program Manager
IDE: Independent Developmental Evaluator
IOE: Independent Operational Evaluator
S: Support Responsibility
CD/FP: Combat Developer/Functional Proponent
DT: Developmental Tester
OT: Operational Tester
TI: Threat Integrator
LOG: Logistician

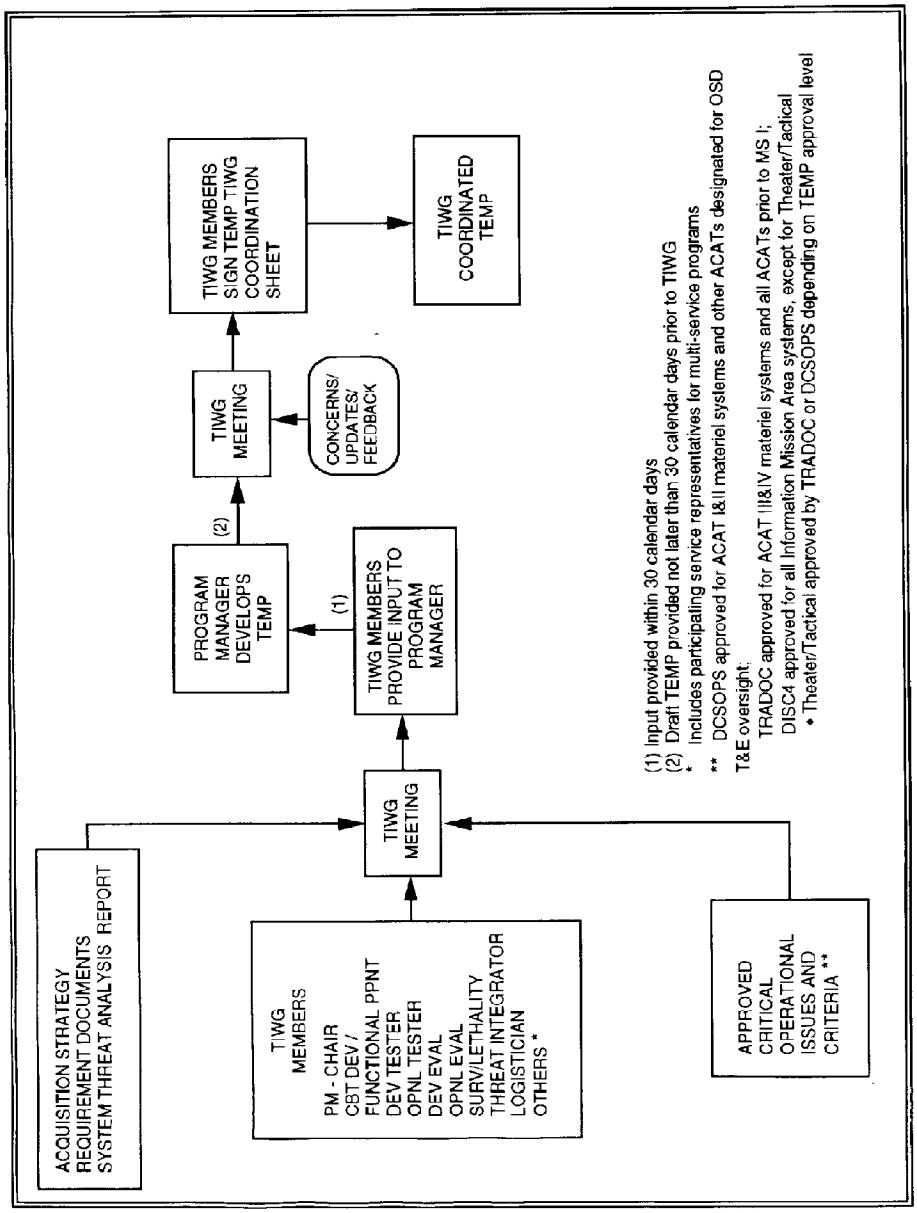

Figure 3-1. TEMP preparation/TIWG coordination process

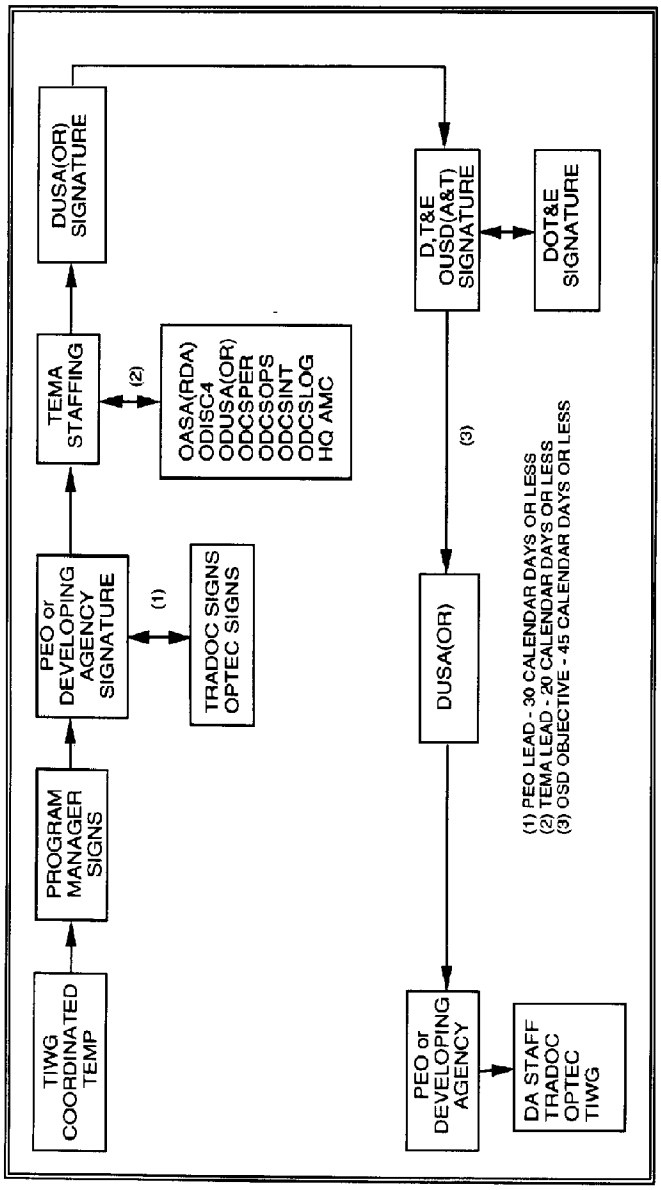

Figure 3-2. TEMP staffing and approval process, acquisition category I and OSD oversight material programs

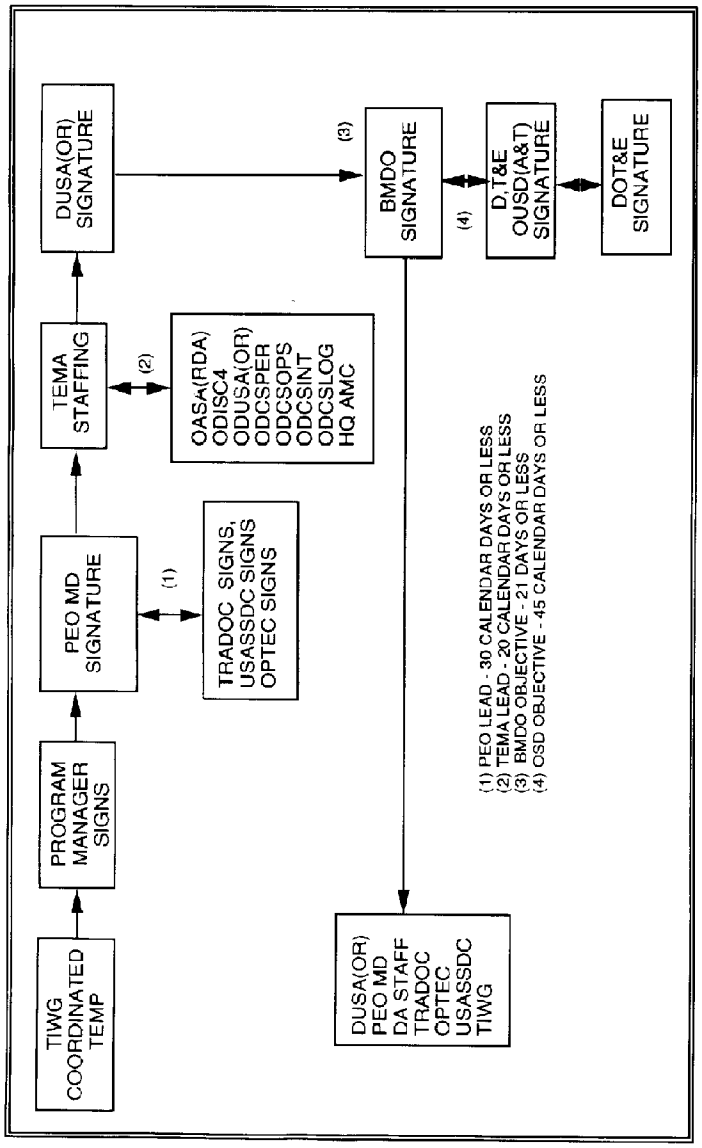

Figure 3-3. TEMP staffing and approval process, Ballistic Missile Defense Organization (BMDO) Element MDAP Systems

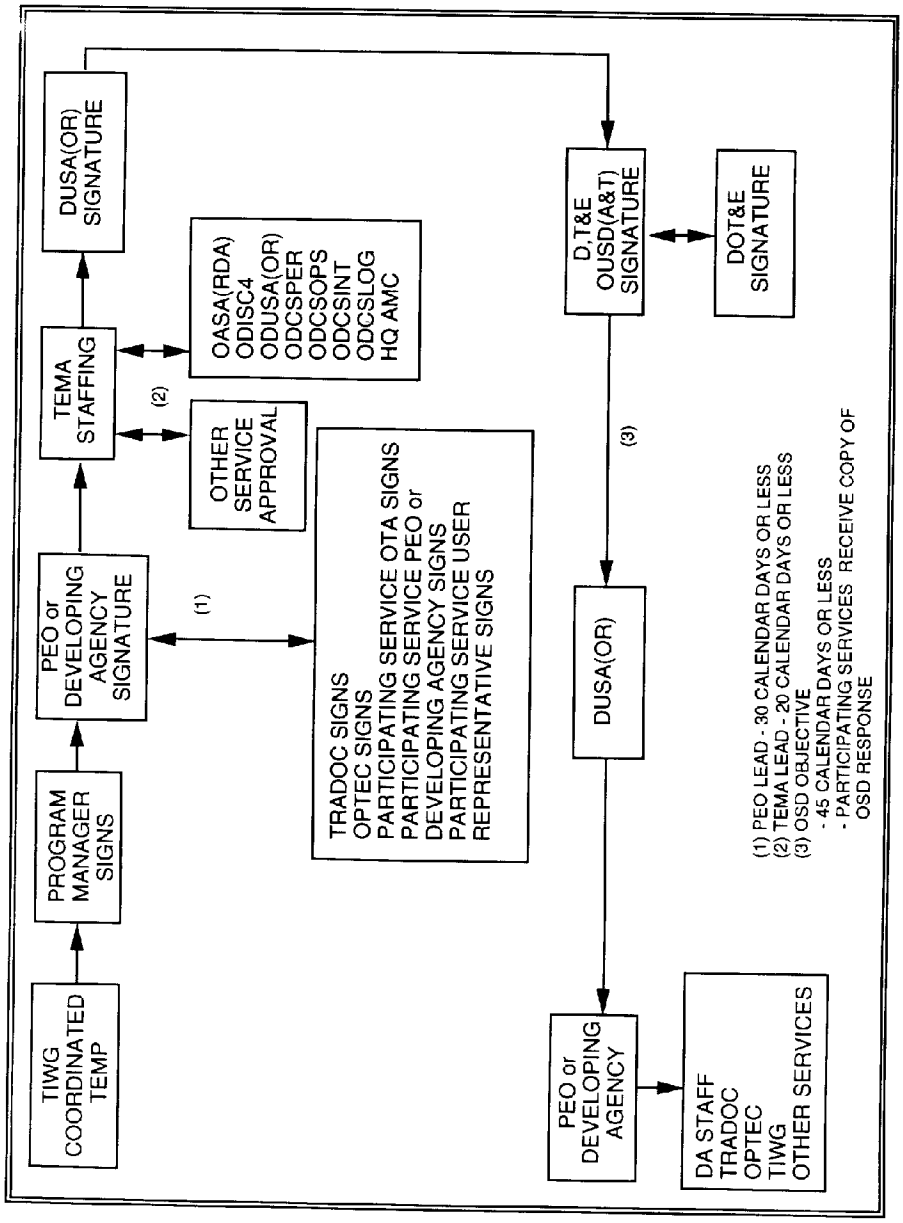

Figure 3-4. TEMP staffing and approval process, acquisition category I & OSD oversight, multi-Service materiel programs, Army lead

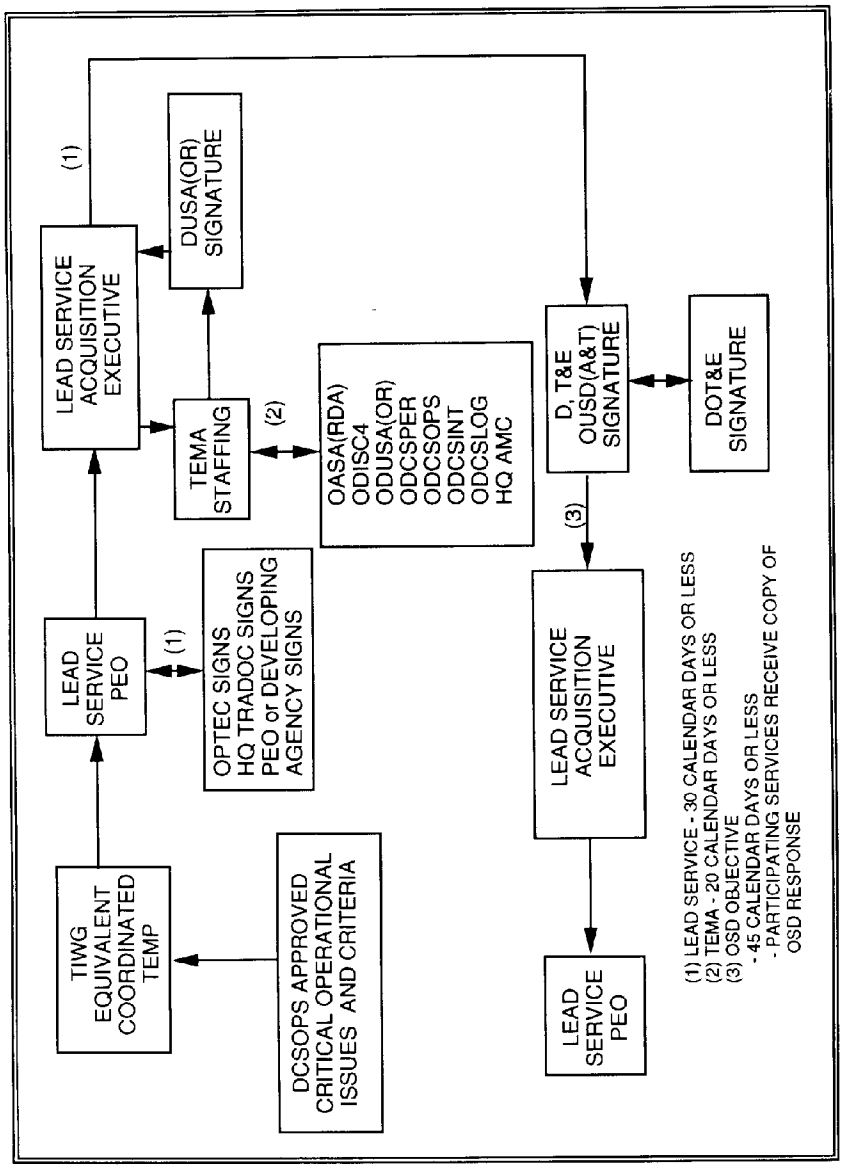

Figure 3-5. TEMP staffing and approval process, acquisition category I & OSD oversight, multi-Service programs, Army participating

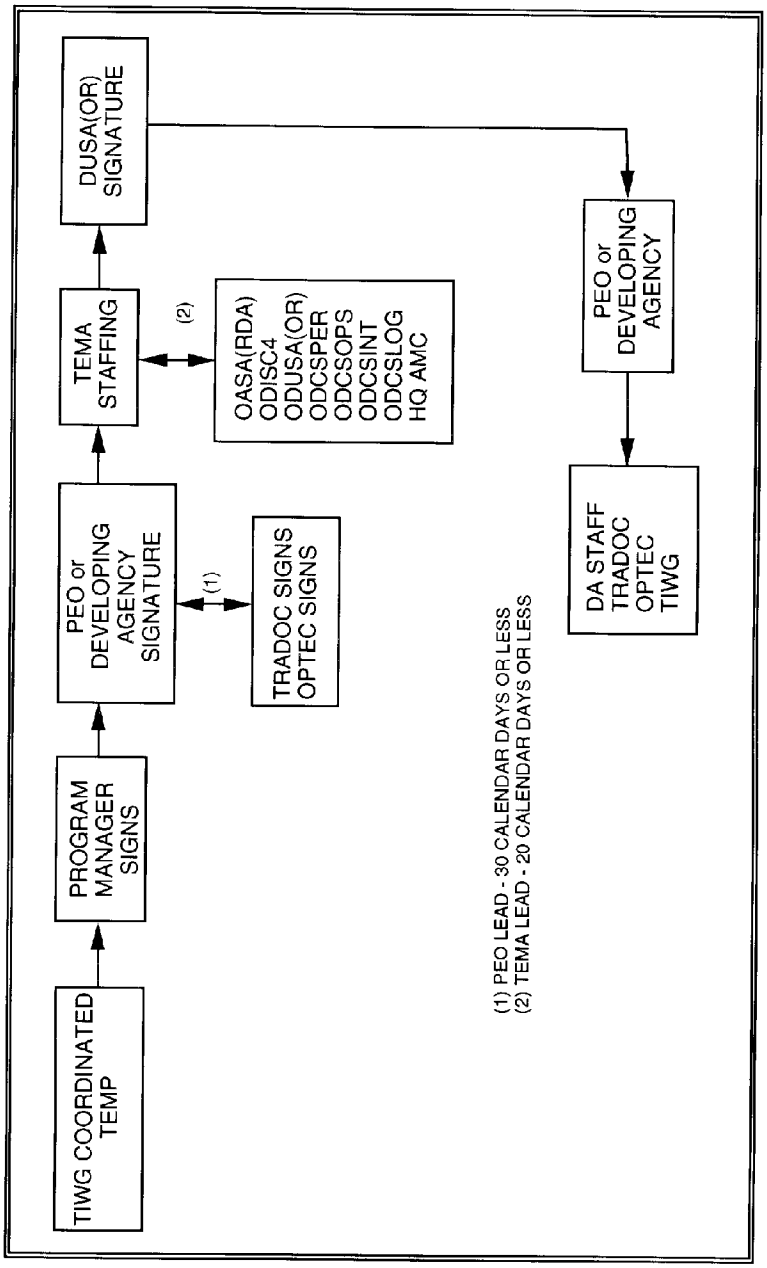

Figure 3-6. TEMP staffing and approval process, acquisition category II and Army special interest materiel programs

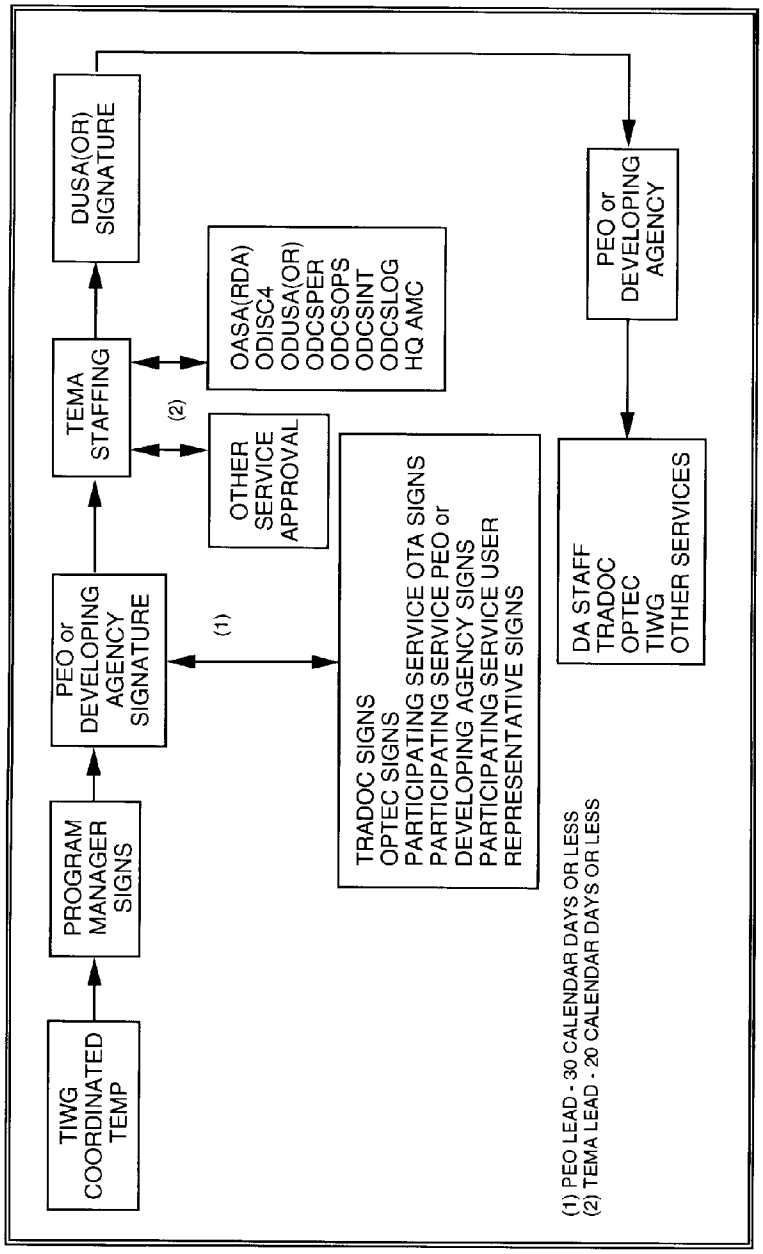

Figure 3-7. TEMP staffing and approval process, acquisition category II multi-Service materiel programs, Army lead

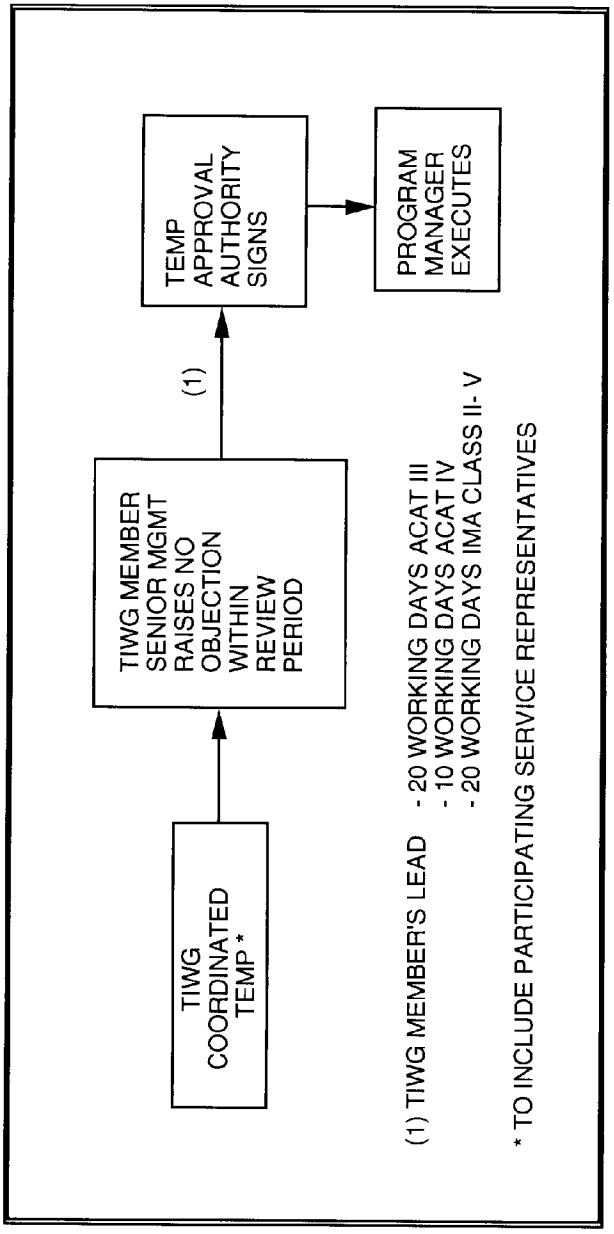

Figure 3-8. TEMP staffing and approval process, acquisition category III and IV materiel programs and class II-V information mission area programs, not designated for OSD T&E oversight (to include multi-Service)

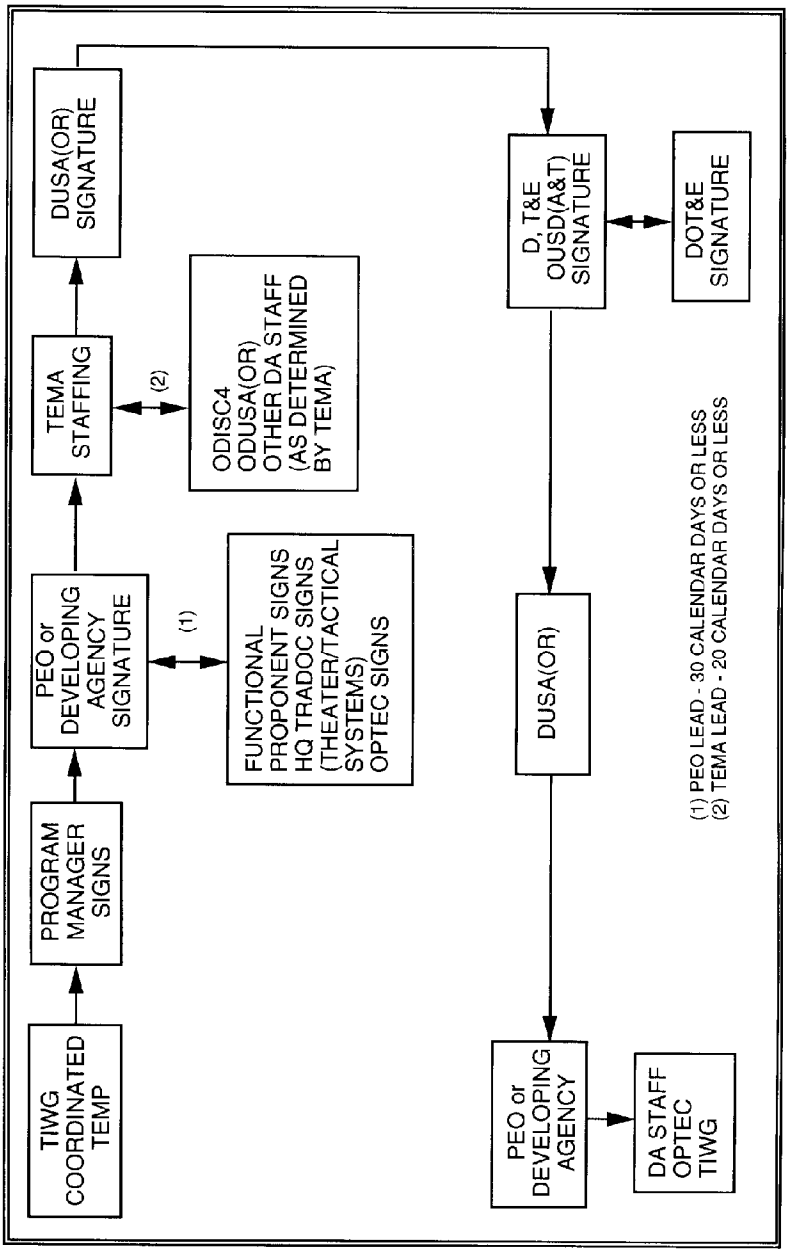

Figure 3-9. TEMP staffing and approval process, OSD MAISRC programs

Chapter 4
Format and Contents for Materiel Programs

Section I
Introduction

4–1. General

a. The format for all Army-developed Test and Evaluation Master Plans will be in accordance with DOD 5000.2–M, part 7. Specific content guidance appropriate for Army TEMP preparation is contained in the following sections. Guidance for ACAT II, III, and IV programs is the same as for ACAT I, except as noted. Table 4–1 and figure 4–1 show Army interpretation of the DOD guidance and figure 4–2 shows the required Army method for displaying minimum acceptable operational performance requirements (MAOPR) information.

b. Signature page formats and layouts for programs by ACAT are provided at figures 4–3 to 4–8. Program element information can be obtained from the current year version of DFAS-IN Manual 37–100–XX.

c. An example of a TIWG coordination sheet is at figure 4–9. The TIWG coordination sheet should show the specific participants of a program; for example the TIWG chair should show the PM and program name, and the specific school/center should be identified as the combat developer; AMSAA should be identified as the developmental evaluator or TECOM as the developmental assessor, and so forth.

d. A TEMP will include a signature page, a TIWG coordination sheet, as shown in figure 4–9, and an outline as shown in table 4–2.

e. A TEMP will include as annex 1 a COEA/critical operational issues and criteria (COIC)/MAOPR/CTP "crosswalk" matrix as shown in figure 4–10.

Section II
TEMP Format and Content for Materiel Systems

4–2. Part I ("System Introduction")

a. "Mission Description." Make a reference to the MNS and summarize the mission need described therein as follows:

(1) Define the need in terms of mission, objectives, and general capabilities.

(2) Summarize from MNS paragraph 2.

(3) Describe the natural environment in two aspects—logistically and operationally. Summarize from MNS paragraph 4.

b. "System Threat Assessment." Reference the system threat assessment and summarize the threat environment described therein as follows:

(1) From STAR paragraphs 4c and 4e, summarize the operational threat environment and the system specific threat. Include the threat at IOC, follow-on at IOC plus 10 years, and the reactive threat from STAR paragraphs 4e and 4f (if applicable).

(2) For ACAT III and IV programs, summarize the above information from the System Threat Assessment (STA).

c. "Minimum Acceptable Operational Performance Requirements." Reference the ORD and summarize the critical operational effectiveness and suitability parameters and constraints (manpower, personnel, training, software, computer resources, transportation (lift), and so forth) described therein.

(1) Identify the parameters and related requirement in a MAOPR matrix as shown in figure 4–2.

(2) Summarize from the ORD paragraphs 4, 5, and 6.

(3) Discuss the relationship between the critical operational effectiveness and suitability parameters and the measures of effectiveness in the COEA.

(4) Operational requirements for software intensive materiel systems are specified in the "Functional Description" and/or "Software Requirements Specification."

(5) For ACAT III and IV programs, for those programs not designated for OSD T&E oversight, it is sufficient to reference the ORD.

d. "System Description." Provide a brief description of the system design, to include the following items:

(1) Key features and subsystems, both hardware and software (such as architecture, interfaces, security levels, reserves, and so forth) that allow the system to perform its required operational mission.

(2) Interfaces with existing or planned systems that are required for mission accomplishment. Address relative maturity, integration, and modification requirements for nondevelopment items. Include interoperability with existing and planned systems of other DOD Components or allies.

(3) Critical system characteristics (see DOD Instruction (DODI) 5000.2, sec 4–C) or unique support concepts resulting in special test and analysis requirements (for example, post deployment software support, hardness against nuclear effects; resistance to countermeasures; development of new threat simulations, simulators, or targets).

(a) For milestone (MS) I, summarize from the ORD or from the development specification if available.

(b) For MS II and beyond summarize from the development specification.

(c) Include line drawings of the system if available.

(d) For software, describe the overall system with emphasis on where mission critical computer resources (MCCR) are used.

(e) Include a single paragraph synopsis of any unique training concepts, logistical support concepts, for example life cycle contractor support and maintenance concepts (to include planned levels for maintenance support).

(f) Include a description of what constitutes the *initial operational capability* (IOC) and the *full operational capability* (FOC) for the system.

e. "Critical technical parameters."

(1) *Critical technical parameters* (CTP) are defined as those measurable critical system characteristics (including software) that allow, when achieved, the attainment of the minimum acceptable operational performance requirements

(2) Critical technical parameters for software may include language, architecture, interfaces, supportability, security levels, time, memory, and input/output reserves. For systems conforming to DOD Standard (STD) 2167A, a matrix relating to the critical technical parameters may be found in the software specification.

(3) List in a matrix format (see table 4–1) the critical technical parameters of the system (including software maturity and performance measures) that have been evaluated or will be evaluated during the remaining developmental testing. Critical technical parameters are derived from the Operational Requirements Document, critical system characteristics (see DODI 5000.2, part 4), and technical performance measures (see DODI 5000.2, sec 6–A) and should include the parameters in the acquisition program baseline (see DOD 5000.2–M, part 14). Next to each technical parameter, list the accompanying objectives and thresholds as illustrated by table 4–1.

(a) "Critical technical parameters"—Obtain from the ORD and related documents and discussed in the Acquisition Program Baseline (APB). Reference the source from which the parameter and value is derived.

(b) "Total events"—Name the developmental tests conducted wherein the parameters are tested. Tests should be outlined in part III.

(c) "Technical objective for each event"—Show the value expected to be attained at that stage of development.

(d) "Location"—Name the place where the test will be performed. Normally a TECOM test facility.

(e) "Schedule"—Show the fiscal quarter when the test will be initiated.

(f) "Decision supported"—Show the program milestone or review that will consider the results of this test.

(g) "Demonstrated value"—State the actual value obtained from testing.

(h) Highlight those critical technical parameters that must be

demonstrated before entering the next acquisition phase or operational test and ensure that the actual values that have been demonstrated to date are included in the last column.

(i) An MS I (preliminary) TEMP is not expected to contain detailed requirements. The TEMP update to support milestone II (subsequent to ORD approval) should include detailed values.

(4) Discuss the relationship between the CTP and the minimum acceptable operational performance requirements in the ORD.

(5) Discuss the relationship between the CTP for test, the measures of performance (MOP) in the COEA, and the critical system characteristics, objectives, and thresholds in the ORD.

4–3. Part II ("Integrated Test Program Summary")

a. "Integrated Test Program Schedule."

(1) As illustrated in figure 4–1 (which can be a fold- out chart), display the integrated time sequencing of the critical test and evaluation phases and events, related activities, and planned cumulative funding expenditures by appropriation.

(2) Include event dates such as milestone decision points; operational assessments, test article availability; software version releases; appropriate live fire test and evaluation and operational test and evaluation events; low rate initial production deliveries; full rate production deliveries; initial operational capability; full operational capability; and statutorily required reports.

(3) A single schedule should be provided for multi- Service or Joint and Capstone TEMPs showing all DOD Component system event dates.

(a) The integrated test program schedule will be divided into seven major areas: program milestones; program acquisition events; contract release and awards; program deliverables; developmental test and evaluation; operational test and evaluation; and program funding.

(b) For ACAT III and IV programs not on the OSD T&E oversight list, it is not critical to adhere to the exact format of figure 4–1. A chart showing the program milestones and the planned tests is adequate. Discuss the relationship between the critical technical parameters and the minimum acceptable operational performance requirements in the ORD.

(c) The schedule must cover the acquisition and T&E program through full operational capability.

(d) The integrated time sequencing of critical events (fig 4–11) will be appropriate for the program.

b. "Management."

(1) Discuss the test and evaluation responsibilities of all participating organizations (developers, testers, evaluators, users), to include the following:

(a) Identify TIWG members and their roles (see table 4–3). Reference the TIWG charter for specific responsibilities. (See AR 73–1 and DA Pam 73–1, chap 8.) The TIWG charter must be included as a reference in appendix A ("Bibliography").

(b) For ACAT III and IV programs, not designated for OSD T&E oversight, it is sufficient to reference the TIWG charter.

(2) If the Human Use Committee (HUC) makes a recommendation that there is no further test plan review required and that recommendation is approved by the test plan approval authority, the recommendation is to be noted in this paragraph and reference made to the decision document in appendix A ("Bibliography"). (See AR 70–25.)

(3) Provide the date (fiscal quarter) when the decision to proceed beyond low-rate initial production (BLRIP) is planned. (Low-rate initial production (LRIP) quantities required for operational test must be identified for the Director of Operational Test and Evaluation approval prior to milestone II for acquisition category I programs and other acquisition category programs designated for OSD T&E oversight.) The date for the BLRIP decision is found in the paragraph titled "Integrated Program Summary" (IPS) in the Acquisition Strategy Report.

(a) The quantity of LRIP items needed for IOT is recommended by OPTEC in coordination with the program manager and included for approval by the D,OT&E for ACAT I and other ACAT programs having OSD test and evaluation oversight.

(b) The quantity of items needed for IOT for all other ACAT programs is included as recommended by OPTEC.

(4) Identify and discuss any operational issues and vulnerability and lethality live fire test requirements that will not be addressed before proceeding beyond low-rate initial production.

4–4. Part III ("Developmental Test and Evaluation Outline")

a. "Developmental Test and Evaluation Overview." Explain how developmental test and evaluation will—verify the status of engineering and manufacturing development progress; verify that design risks have been minimized; substantiate achievement of contract technical performance requirements; and be used to certify readiness for dedicated operational test.

(1) Specifically identify any technology or subsystem that has not demonstrated an ability to contribute to system performance and ultimately fulfill mission requirements.

(2) Specifically identify the degree to which system hardware and software design have stabilized so as to reduce manufacturing and production decision uncertainties.

(3) Summarize the entire developmental test and evaluation program.

(4) Present a narrative walk-through of the integrated schedule, discussing the interrelationships between tests, developmental and operational, and between tests and milestones. Do not duplicate details that will be found in TEMP paragraph IIIc ("Future Developmental Test and Evaluation"). The purpose of the overview paragraph is to identify how the individual tests fit within the framework of the overall program and the continuous evaluation process. Some of the topics that need to be addressed in this paragraph include the following:

(a) Early developmental tests that will be performed to mitigate technical risks in the program that are defined in the "Risk Assessment," annex D of the Integrated Program Summary (reference DOD 5000.2–M, part 4, annex E).

(b) Identification of developmental tests that will be used to demonstrate that the test item is safe, that the technical manuals are verified and validated and ready for use in a following or concurrent operational test.

(c) Identification of the test, usually a pre-production qualification test (PPQT), that will be performed to validate that the system meets the program's technical performance requirements that are usually contractually mandated in a specification.

(d) The developmental test(s) that will be used to certify the system is ready for initial operational test (IOT) and who has responsibility for execution.

(e) If applicable, testing to address conventional weapon effects, electromagnetic and environmental effect (E3), ECM/ECCM, initial nuclear weapons effects, advanced technology survivability and NBC contamination survivability (reference DODI 5000.2, part 6, sec F).

(f) Identification of the test plans and strategy to prove or validate the manufacturing process (reference DODI 5000.2, part 6, sec O).

(5) The following areas (paras (*a*) through (*f*) below) need to be addressed throughout developmental test and evaluation (they are addressed in general in the DT&E overview paragraph and specifically in the description, objective, and so forth of each of the developmental tests addressed in the future DT&E paragraph).

(a) Reliability and maintainability (reference DODI 5000.2, part 6, sec C).

(b) Electromagnetic compatibility and radio frequency management (reference DODI 5000.2, part 6, sec G).

(c) Human factors (reference DODI 5000.2, part 6, sec H).

(d) System safety, health hazards and environment (reference DODI 5000.2, part 6, sec I).

(e) Integrated logistical support (reference DODI 5000.2, part 7, sec A). A logistics demonstration (LD) is required for all acquisition programs unless waived. (See AR 700–127.) If approved, the waiver

will be documented in part II, paragraph 2, with the approval document referenced in the TEMP's appendix A ("Bibliography").

(f) Discuss the indicators that will be used to determine software status and evaluate progress toward software maturity in support of key decision points, particularly for software intensive systems. Show how the indicators in each phase relate to those in previous and subsequent phases.

b. "Developmental Test and Evaluation to Date."

(1) Identify completed DT&E by noting on the matrix of critical technical parameters those parameters that have been demonstrated.

(2) Update the critical technical parameters matrix in part I. Note the actual values that have been demonstrated.

(3) For parameters not met, provide a brief explanation as to why not and performance impact. Identify a future test that will readdress parameters.

(4) A detailed discussion of the results of testing is not required.

(5) The T&E reports prepared to date must be included as references in appendix A ("Bibliography").

c. "Future Developmental Test and Evaluation." Discuss all remaining planned developmental test and evaluation, beginning with the date of the current TEMP revision, and extending through completion of production. Place emphasis on the next phase of testing. For each test within each remaining acquisition phase, address the following items: configuration description, DT&E objectives, DT&E events, scope, basic scenarios, and limitations. For example:

1. Demonstration Validation Phase; Chassis Design Test
   (a) Configuration Description (of test item)
   (b) Test and Evaluation Objectives
   (c) Events, Scope of Testing, and Basic Scenarios
   (d) Limitations
2. Engineering and Manufacturing Development Phase; Pre-Production Qualification Test.
   (a) Configuration description (of test item)
   (b) Test and Evaluation Objectives
   (c) Events, Scope of Testing, and Basic Scenarios
   (d) Limitations

(1) *"Configuration Description."* Summarize the functional capabilities of the system's developmental configuration and how they differ from the production model. List the difference between the system to be tested and the objective system, to include software.

(2) *"Developmental Test and Evaluation Objectives."* State the test objectives for this phase in terms of the critical technical parameters to be confirmed. Identify any specific technical parameters that the milestone decision authority has designated as exit criteria and/or directed to be demonstrated in a given phase of testing.

(a) Exit criteria are generally found in the Acquisition Decision Memorandum (ADM) for ACAT I and II programs.

(b) For ACAT III & IV, exit criteria can be found in the in-process review (IPR) decision documentation.

(3) *"Developmental Test and Evaluation Events, Scope of Testing, and Basic Scenarios."* Summarize the test events, test scenarios and the test design concept. Quantify the testing in terms of number of test hours, test events, test firings, and so forth. List the specific threat systems, surrogates, countermeasures, component or subsystem testing, and testbeds whose use are critical to determine whether developmental test objectives are achieved. As appropriate, particularly if an agency separate from the test agency will be doing a significant part of the evaluation, describe the methods of evaluation. List all models and simulations to be used and explain the rationale for their credible use. Describe how performance in natural environmental conditions representative of the intended area of operations and interoperability and compatibility with other weapon and support systems (as applicable) will be tested. (Examples of representative environmental conditions are temperature, pressure, humidity, fog, precipitation, clouds, blowing dust and sand, icing, wind conditions, steep terrain, wet soil conditions, high sea state, storm surge and tides, and so forth.)

(a) The resources identified must correspond to those listed in part V.

(b) Include a discussion of any test databases and/or remote terminal emulators to be used and their relationship to the objective system environment.

(4) *"Limitations."* Discuss the test limitations that may significantly affect the evaluator's ability to draw conclusions, state the impact of these limitations, and explain resolution approaches.

(5) *Test data validity.* Identify the differences between the COEA environment and the test environment that would affect the ability to use test data in validating the COEA database used for predicting operational effectiveness.

d. "Live Fire Test and Evaluation (LFT&E)."

(1) This paragraph applies to those systems that are identified as a covered system or major munition program as defined in section 2366, title 10, United States Code. Do not address LFT&E in a separate annex.

(2) Include a description of the overall LFT&E strategy for the test item, critical LFT&E issues, required levels of system vulnerability/lethality, the management of the LFT&E program, LFT&E schedule, funding plans and requirements, related prior and future LFT&E efforts, the evaluation plan and shot selection process, and major test limitations for the conduct of LFT&E. Resource requirements for LFT&E (including test articles and instrumentation) will be appropriately identified in the T&E resource summary paragraph. See LFT&E guidance for additional details.

(3) Group all vulnerability/lethality testing (when applicable) under one paragraph to show how the vulnerability/lethality issue is being assessed through various tests and subtests. Such testing can include dedicated tests such as ballistic hull and turret testing and live fire test. Subtests can include armor plate tests, penetration tests, as well as other tests that validate the vulnerability/lethality requirements of a program.

(4) Provide an executive level summary discussion.

(5) Summarize LFT details as appropriate throughout the TEMP.

(6) Leave detailed discussion to the test plans.

4–5. Part IV ("Operational Test and Evaluation Outline")

a. "Operational Test and Evaluation Overview." The primary purpose of operational testing and evaluation is to verify that operationally effective and operationally suitable systems are approved for production and that they meet the mission needs and minimum operational performance requirements of the operating forces.

(1) The TEMP will show how program schedule, test management structure, and required resources are related to operational requirements, critical operational issues, test objectives, and milestone decision points. Testing will evaluate the system (while operated by typical users) in an environment as operationally realistic as possible, including threat representative hostile forces and the expected range of natural environmental conditions.

(2) Summarize the entire operational test and evaluation program and the evaluation strategy. Present a narrative walk-through of the integrated schedule discussing the interrelationships between contractor, Government, developmental and operational tests, models, and simulations and the milestones they support. Do not duplicate the details that are provided in "Future Operational Test and Evaluation," paragraph d of the "Operational Test and Evaluation Outline." The purpose of the overview is to give a quick, concise look at the overall test program, explaining the many interrelationships and opportunities to conduct continuous evaluation (CE). Some of the topics that need to be addressed include—

(a) Identification of contractor and developmental tests that will be used as part of an operational evaluation or assessment.

(b) Identification of simulations that will be used to augment and extend operational testing as part of an operational evaluation or assessment.

(c) Identification of completed and planned battle lab experimentation to be used in the evaluation. These experiments when planned

and executed in coordination with OPTEC may serve to reduce future operational test requirements.

(d) Key characteristics of the system that will be the focus of the evaluation.

(e) Sources of data, baseline comparisons, and general analysis scheme and test data/COEA linkage.

(3) The following areas need to be addressed throughout Operational Test and Evaluation. (They are addressed in general in the OT&E overview paragraph and specifically in the description, objective, and so forth of each of the operational tests addressed in the paragraph on future OT&E.)

(a) Human performance issues must be addressed (reference DODI 5000.2, part 7, sec B).

(b) Logistics support issues (readiness, reliability, availability, and maintainability) to include test measurement and diagnostic equipment (TMDE) and integrated diagnostics must be addressed (reference DODI 5000.2, part 7, sec A).

b. "Critical Operational Issues." List in this paragraph the approved critical operational issues. Critical operational issues include operational effectiveness and operational suitability issues (not parameters, objectives or thresholds) that must be examined in operational test and evaluation to evaluate or assess the system's capability to perform its mission.

(1) A critical operational issue is typically phrased as a question that must be answered in order to properly evaluate operational effectiveness (for example,"Will the system detect the threat in a combat environment at adequate range to allow successful engagement?") and operational suitability (for example, "Will the system be safe to operate in a combat environment?").

(2) Some critical operational issues will have critical technical parameters and minimum acceptable operational performance requirements and thresholds. Individual attainment of these attributes does not guarantee that the critical operational issue will be favorably resolved. The judgment of the operational test agency is used by the DOD Component to determine if the critical operational issue is favorably resolved.

(3) If every critical operational issue is resolved favorably, the system should be operationally effective and operationally suitable when employed in its intended environment by typical users.

(4) Approval by TRADOC is required for the critical operational issues and criteria for all programs at MS I and for ACAT III and IV programs at all milestones. Approval by the Deputy Chief of Staff for Operations and Plans (DCSOPS) is required for critical operational issues and criteria for ACAT I, II and OSD T&E oversight materiel program systems at MS II and beyond. Army policy (AR 73–1, para 5–8) requires approved COIs be included in the TEMP.

(5) Include the approved COICs in their entirety in the TEMP or attach as an annex that includes issue, scope, criteria, and rationale.

(6) Discuss the relationships between the criteria in the COIC, the minimum acceptable operational performance requirements in the ORD, and the MOEs with supporting MOPs in the COEA. The discussion should be part of the COIC rationale statement.

(7) Reference the COIC approval document in the TEMP's appendix A ("Bibliography").

c. "Operational Test and Evaluation to Date." Identify and date test reports that detail the results of testing and operational assessments to date. Indicate COIs that were resolved (satisfactory, unsatisfactory, yes, no, and so forth), partially resolved, or unresolved at the completion of each phase of testing.

(1) Discuss the results related to the resolution of the criteria in addition to the overall issue.

(2) Ensure that all referenced test reports are listed in the TEMP's appendix A ("Bibliography"). Reports must be available if requested.

(3) Based on the previously identified operational issues, summarize what has been learned about the maturity of the software during operational testing. Show how operational test results from interim hardware and software configurations apply to configurations intended for deployment. Identify differences between tested software, software planned for the current phase, and software to be deployed. Discuss the importance of these differences.

d. "Future Operational Test and Evaluation." For each remaining phase of operational test and evaluation, separately address the following:

(1) *Operational and developmental tests.* Identify operational tests that will be conducted and the developmental tests that will provide source data for operational evaluation or assessment. When developmental tests are identified, a paragraph titled "Operational Test and Evaluation Events, Scope of Testing, and Scenarios" should define the data in general terms that will be taken from the developmental test for the evaluation or assessment (see (6) below). This will ensure that the developmental testers and evaluators, by their signature on the TEMP, have agreed to collect and provide that data to the operational evaluator.

(2) *Model accreditation.* Describe how models will be accredited for use in specific operational tests. The approval vehicle for accreditation is an accreditation plan, as outlined in AR 5–11. Reference the accreditation plan in the TEMP's appendix A ("Bibliography"). Part V of the TEMP ("Test and Evaluation Resource Summary") will identify the resources necessary to perform the validation and/or accreditation.

(3) *Multiple tests per phase.* If more than one test is in a phase, configuration description (of test item); test and evaluation objectives; events, scope of testing, and scenarios; and limitations should be included for each test. For example, if during the demonstration/validation phase, an early user test (EUT) were planned, the following information paragraphs should be addressed for that test:

(a) Configuration description (of test item)

(b) Test and Evaluation Objectives

(c) Events, Scope of Testing, and Scenarios

(d) Limitations

Note. Either list each sub-element for the developmental test to be used for data or refer to the applicable paragraph in part III of the TEMP that contains the information.

(4) "*Configuration Description.*" Identify the configuration of the system to be tested during each phase and describe any differences between the tested system and the system that will be fielded including, where applicable, software maturity performance and criticality to mission performance, and the extent of integration with other systems with which it must be interoperable or compatible. Characterize the system (for example, prototype, engineering development model, production representative, or production configuration).

(5) *"Operational Test and Evaluation Objectives."* State the test objectives, including the minimum acceptable operational performance requirements and critical operational issues, to be addressed by each phase of OT&E and the milestone decision review(s) supported. The OT&E that supports the beyond low rate initial production decision should have test objectives that examine all areas of operational effectiveness and suitability.

(a) Discuss the relationship between OT&E objectives and the software characteristics which affect COIs.

(b) For follow-on OT&E (FOT&E), identify major deficiency corrections to be verified. The OTs should be designed to assure that software is fault tolerant and supportable.

(6) *"Operational Test and Evaluation Events, Scope of Testing, and Scenarios."* Summarize the scenarios and identify the events to be conducted, type of resources to be used, threat simulators and simulation(s) to be employed, type of representative personnel who will operate and maintain the system, the status of the logistic support, the operational and maintenance documentation that will be used, the environment under which the system is to be employed and supported during testing, and the plans for interoperability and compatibility testing with other United States/Allied weapon and support systems, as applicable. Identify planned sources of information (for example, developmental testing, testing of related systems, modeling, simulation, and so forth) that may be used by the operational test agency to supplement this phase of operational test and

evaluation. Whenever models and simulations are to be used, explain the rationale for their credible use. If operational test and evaluation cannot be conducted or completed in this phase of testing and the outcome will be an operational assessment instead of an evaluation, this should be clearly stated and the reason(s) explained. Include a description of the relationship between software functions being tested and test scenario events that will cause that function to be exercised. Identify load levels to be used and their relationship to the required operational environment.

(7) *"Limitations."* Discuss test limitations, to include threat realism, resource availability, limited operational (military, climatic, nuclear, and so forth) environments, limited support environment, maturity of tested system, safety, and so forth that may alter the resolution of affected critical operational issues. Indicate the effect of the test limitations on the ability to resolve critical operational issues and the ability to formulate conclusions regarding operational effectiveness and operational suitability. After each limitation, indicate in parentheses the critical operational issues affected.

(a) Identify any factors that may inhibit realistic OT of the software. Constraints imposed by software maturity or availability of resources and simulators should be given along with their impact on critical operational issues.

(b) Identify differences between the COEA environment and the test environment that would affect the ability to use test data in validating the COEA database used for predicting operational effectiveness.

4–6. Part V ("Test and Evaluation Resource Summary")

Provide a summary (preferably in a table or matrix format) of all key test and evaluation resources, both Government and contractor, that will be used during the course of the acquisition program. Existing capabilities that are key to accomplishing the test program need to be included, specifically those for which use is known to be restricted or where significant upgrade or improvement is needed. Include requirements for a new or unique capability or an item that needs to be acquired or developed to support the test program. Information addressing paragraphs *a* through *f* below should be included in the matrix or table. At a minimum, the matrix should identify the item, the quantity or number required, the location, the test event or time frame when needed, the resources required to be obtained, and the organization or activity responsible for acquisition or development. The developmental tester and operational tester should provide input specific to their requirements and indicate which requirements were identified by each tester.

a. Test articles. Identify the actual number of and time requirements for all test articles, including key support equipment and technical information required for testing in each phase by major type of developmental test and evaluation and operational test and evaluation. If key subsystems (components, assemblies, subassemblies or software modules) are to be tested individually, before being tested in the final system configuration, identify each subsystem in the TEMP and the quantity required. Specifically identify when prototype, engineering development, pre-production, or production models will be used.

b. Test sites and instrumentation. Identify the specific test ranges or facilities to be used for each type of testing. Compare the requirements for test ranges or facilities dictated by the scope and content of planned testing with existing and programmed test range or facility capability and highlight any major shortfalls, such as the inability to test under representative natural environmental conditions. Identify instrumentation that must be acquired specifically to conduct the planned test program.

(1) Include in this paragraph software facilities and tools to support testing identified in parts III and IV of the TEMP.

(2) Address shortfalls and associated impacts under the limitations paragraph in part III and/or part IV of the TEMP, as applicable.

(3) Testing shall be planned and conducted to take full advantage of existing investment in DOD ranges, facilities and other resources, wherever practical (reference DODI 5000.2, part 8, para 2.d.(4)).

(4) In order for the Army to realize maximum value from its capital investment in test facilities, it is necessary that PEO/PMs coordinate developmental test and evaluation requirements with TECOM. This should be accomplished early in the acquisition cycle, preferably prior to MS I. This coordination should facilitate the development of developmental testing requirements and determine the extent and nature of contractor services, if required. If TECOM cannot conduct the developmental test (for example, scheduling does not permit), the PEO/PM has the authority to use contractor support. This decision and rationale will be documented in this paragraph of the TEMP.

(5) Address instrumentation that must be developed or procured. Clearly identify the test investment requirement to ensure test site instrumentation availability and capability.

c. Test support equipment. Identify test support equipment that must be acquired specifically to conduct the test program.

(1) Address only new test support equipment. This includes software test drivers, emulators, or diagnostics, if applicable, to support identified testing. Identify unique or special calibration requirements associated with this test support equipment.

d. Threat systems/simulators. Identify the type, number, availability, and fidelity requirements for all threat systems/simulators. Compare the requirements for threat systems/simulators with available and projected assets and their capabilities. Highlight any major shortfalls. Each threat simulator shall be subjected to validation procedures to establish and document a baseline comparison with its associated threat and to ascertain the extent of the operational and technical performance differences between the two throughout the simulator's life-cycle. Threat systems/simulators to be used in activities supporting milestone decisions must be validated and accredited for the specific application. Validation and accreditation procedures are to be documented in accordance with the Army Validation and Accreditation Plan as described in DA PAM 73–1, chapter 11. The resulting report should be cited in TEMP's appendix A ("Bibliography").

e. Test targets and expendables. Identify the type, number, and availability requirements for all targets, flares, chaff, sonobuoys, smoke generators, acoustic countermeasures, and so forth that will be required for each phase of testing. Identify any major shortfalls. Include threat targets for LFT lethality testing and threat munitions for vulnerability testing. High fidelity targets require the same validation and accreditation process as for threat systems and simulators. Results of this effort should be cited in appendix A ("Bibliography").

f. Operational force test support. For each test and evaluation phase, identify the type and timing of aircraft flying hours, ship steaming days, and on-orbit satellite contacts/coverage, and other critical operating force support required. Include size, location, and type unit of unit required.

g. Simulation, models, and testbeds. For each test and evaluation phase, identify the system simulations required, including computer-driven simulation models and hardware/software-in-the-loop testbeds. Identify the resources required to validate and certify their credible usage or application before their use.

(1) Include only those simulations, models, and testbeds that will be used to extend testing or be used in evaluation. This includes feeder models.

(2) Simulations, models, and test beds used solely for engineering purposes (not in support of program decisions) do not need to be identified in this paragraph. The items identified in this paragraph should have an accreditation plan developed as outlined in a Deputy Under Secretary of the Army (Operations Research) (DUSA(OR)) memorandum dated 30 October 1989, subject: Verification, Validation and Accreditation of Models.

h. Special requirements. Discuss requirements for any significant non-instrumentation capabilities and resources such as special data processing/data bases, unique mapping/charting/geodesy products, extreme physical environmental conditions, or restricted/special use air/sea/landscapes. Software resource requirements are found in the Computer Resources Life Cycle Management Plan (CRLCMP).

i. Test and evaluation funding requirements. By fiscal year and

appropriation line number (program element), estimate the funding required to pay direct costs of planned testing. By fiscal year, state the funding currently appearing in those lines (program elements). Identify any major shortfalls.

(1) Use of a table or matrix is preferred.

(2) Show potential shortfalls.

j. Manpower/personnel training. Identify manpower/personnel and training requirements and limitations that affect test and evaluation execution. The preliminary TEMP should project the key resources necessary to accomplish demonstration and validation testing and early operational assessment. The preliminary TEMP should estimate, to the degree known at milestone I, the key resources necessary to accomplish developmental test and evaluation, live fire test and evaluation, and operational test and evaluation. These should include elements of the National Test Facilities Base (which incorporates the Major Range and Test Facility Base (MRTFB), capabilities designated by industry and academia, and Major Range and Test Facility Base test equipment and facilities), unique instrumentation, threat simulators, and targets. As system acquisition progresses, the preliminary test resource requirements shall be reassessed and refined and subsequent TEMP updates shall reflect any changed system concepts, resource requirements, or updated threat assessments. Any resource shortfalls that introduce significant test limitations should be discussed with planned corrective action outlined. This paragraph contains overall guidance for preparing a preliminary TEMP, that is, a TEMP to support milestone I; it is not a separate paragraph to be addressed in the TEMP.

4–7. Appendixes, annexes, and attachments

a. Appendix A ("Bibliography").

(1) Cite in this section all documents referred to in the TEMP.

(2) Cite all reports documenting developmental and operational testing and evaluation.

b. Appendix B ("Acronyms"). List and define all acronyms used in the TEMP.

c. Appendix C ("Points of Contact"). Provide a list of points of contact as illustrated by figure 4–12.

d. Annexes or attachments. Provide as appropriate. An annex is written specifically for the TEMP, whereas an attachment is a standalone document.

e. Annex 1 ("COEA/COIC/MAOPR/CTP Crosswalk").

(1) The purpose of this annex is to illustrate a linkage among the cost and operational effectiveness analyses measures of effectiveness, the critical operational issues and criteria, the minimum acceptable operational performance requirements, and the critical technical parameters, and relate these items to specific test events for identification of data necessary to evaluate the system against the requirements. This annex shall be "Annex 1" to the TEMP and will consist of a foldout spreadsheet or matrix as shown in figure 4–10.

(2) The linkage can be developed using any one of the categories to generate the association. Since the COIC are usually the fewest in number, it may be easiest to begin with the COIC and then develop the linkage with the other categories. The MAOPR column should reflect precisely the MAOPR table contained in part 1 of the TEMP. The CTP column should also reflect precisely the CTP matrix in part 1 of the TEMP.

(3) The second part of the matrix should consist of all test events contained in the test strategy. For each test event, a check mark is placed in a box, provided data from that test will be used to satisfy the corresponding requirement.

Table 4–1
Sample critical technical parameters matrix

Critical technical parameters	Total events	Technical objective for each test event	Location	Schedule	Decision supported	Demonstrated value
Measurable parameter with reference	Single event or test phase	Measurable technical value	est facility	Test period	Milestone, in-process review or major event	(Include the actual value)
Detection range 10.0 Km (Reference)	EDT PPT PPQT	7.0 Km 9.0 Km 10.0 Km	ABC Range DEF Range DEF Range	1Q FY-XX 2Q FY-XX 3Q FY-XX	MS II MS III MS III	X Y Z

Notes:
This matrix depicts the evaluation criteria to assess development progress.

Table 4–2
Test and Evaluation Master Plan outline (format)

Part	Page number
PART I SYSTEM INTRODUCTION (2 pages suggested - refer to annexes)	
a. Mission Description	xx
b. System Threat Assessment	xx
c. Minimum Acceptable Operational Performance Requirements	xx
d. System Description	xx
e. Critical Technical Parameters[1]	xx
PART II INTEGRATED TEST PROGRAM SUMMARY (2 pages suggested)	
a. Integrated Test Program Schedule[2]	xx
b. Management	xx
PART III DEVELOPMENTAL TEST AND EVALUATION OUTLINE (10 pages suggested)	
a. Developmental Test and Evaluation Overview	xx
b. Developmental Test and Evaluation to Date	xx
c. Future Developmental Test and Evaluation	xx
d. Live Fire Test and Evaluation	xx
PART IV OPERATIONAL TEST AND EVALUATION OUTLINE (10 pages suggested)	

Table 4–2
Test and Evaluation Master Plan outline (format)—Continued

Part	Page number
a. Operational Test and Evaluation Overview	xx
b. Critical Operational Issues	xx
c. Operational Test and Evaluation to Date	xx
d. Future Operational Test and Evaluation	xx
PART V TEST AND EVALUATION RESOURCE SUMMARY (6 pages suggested)	
a. Test Articles	xx
b. Test Sites and Instrumentation	xx
c. Test Support Equipment	xx
d. Threat Systems/Simulators	xx
e. Test Targets and Expendables	xx
f. Operational Force Test Support	xx
g. Simulations, Models and Testbeds	xx
h. Special Requirements	xx
i. T&E Funding Requirements	xx
j. Manpower/Personnel Training	xx
APPENDIX A Bibliography	A-1
APPENDIX B Acronyms	B-1
APPENDIX C Points of Contact	C-1
ANNEXES/ATTACHMENTS (if appropriate)	

Notes:
[1] See table 4-1.
[2] See figure 4-1.

Table 4–3
TIWG members and roles

TIWG members	TIWG role
Program manager (any given system)	TIWG chairman
TRADOC proponent school	System combat developer
Operational Evaluation Command (OEC)	System operational evaluator
Test & Experimentation Command (TEXCOM)	System operational tester
Army Materiel Systems Analysis Agency (AMSAA) and/or Test & Evaluation Command (TECOM)	System Developmental Evaluator/Assessor
TECOM	System developmental tester
AMSAA	System logistician
Survivability & Lethality Analysis Directorate, Army Research Laboratory (SLAD, ARL)	Survivability/lethality
Air Force Operational Test & Evaluation Command; Marine Corps Operational Test & Evaluation Agency; Operational Test & Evaluation Force (Navy)	Participating Service operational test representative if TIWG has multi-Service participation.
Participating Service user representative	Additional combat developer input
Army Research, Development & Engineering Command (ARDEC)	Independent verification and validation agency

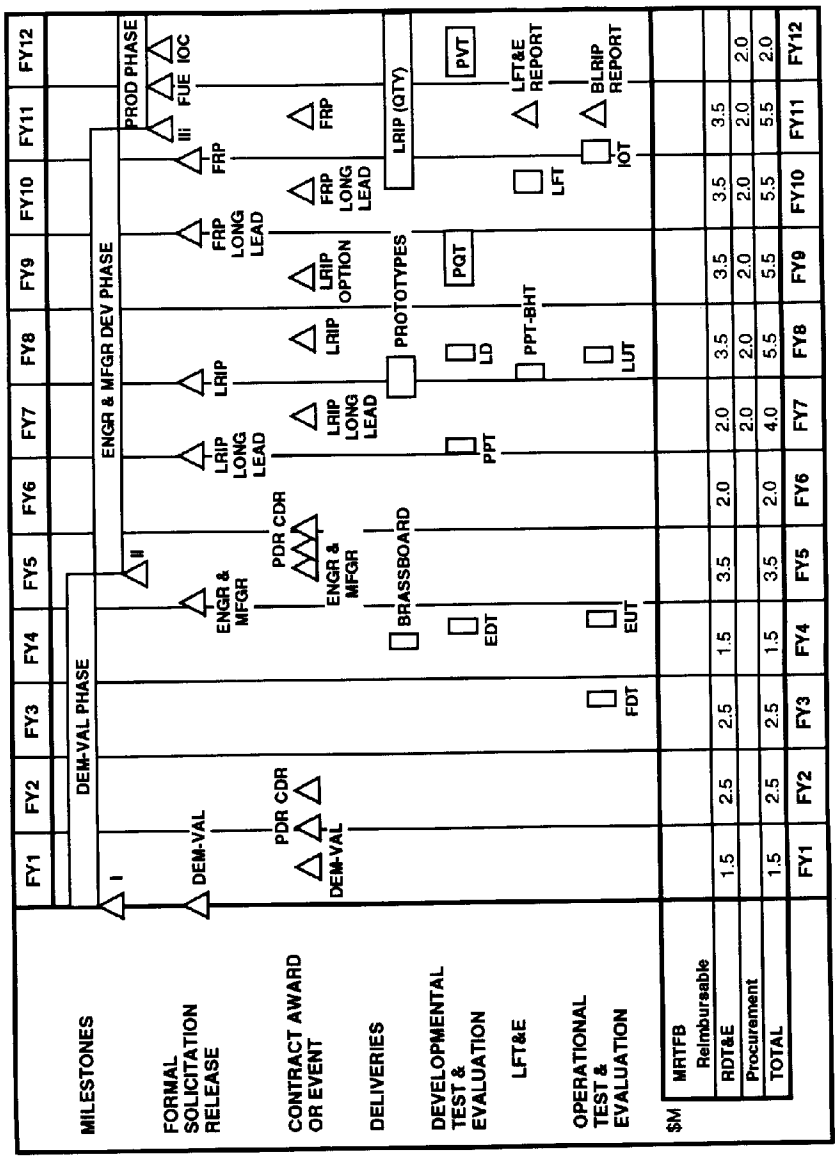

Figure 4-1. Integrated test program schedule (illustrative example)

PARAMETER	REQUIREMENT
1. Can system successfully perform target acquisition functions?	System must effectively detect, locate, classify, and communicate targeting information as measured against mission success templates on 80% of mission tasks. (ORD para 4.a)
2. Can system survive while conducting primary mission?	System must be capable of surviving on the battlefield and sustaining the operational tempo required to complete its mission. (ORD para 4.b)
3. Does system provide the commander with the light attack capability and the ability to coordinate fires against threat systems?	System must successfully engage or provide target handover to digitally compatible systems to allow members of the combined arms team to successfully engage threat forces to render them combat ineffective, as defined in the mission success templates. (ORD para 4.c)
4. Can units equipped with the system achieve the commander's sustained combat requirements?	System must be operationally available for missions at least 75% of the time. (ORD para 4.d)

Figure 4-2. Minimum acceptable operational performance requirements (MAOPR) matrix

TEST AND EVALUATION MASTER PLAN
FOR
ARMORED SYSTEMS
NEW ARMOR TANK (NAT)
DATE: 1 January 1995
UPDATE XX, DATE (As applicable)
REVISION XX, DATE (As applicable)

Program Elements
658472.031
634721.111

****

SUBMITTED BY

Joe P.M. Doe
Program Manager

1 January 1995
DATE

CONCURRENCE

Henry Armor Tank
Program Executive Officer
(or Developing Agency,
if no PEO)

15 February 1995
DATE

Jack J. O. Test
CDR, U.S. Army Operational
Test & Evaluation Command
(OPTEC)

15 February 1995
DATE

T. Ray Ning
DCS Combat,
Doctrine &
Development,
USA TRADOC

15 February 1995
DATE

COMPONENT APPROVAL

John O.R. Mann
Deputy Under Secretary of
the Army (Operations Research)

15 March 1995
DATE

****

OSD APPROVAL

Final Approval
Director, Operational
Test and Evaluation

30 April 1995
DATE

Final Approval II
Director, Test and Evaluation
Under Secretary of Defense
(Acquisition and Technology)

30 April 1995
DATE

Figure 4-3. Signature page format for ACAT I and other ACATs designated for OSD test and evaluation oversight

TEST AND EVALUATION MASTER PLAN
FOR
ARMORED SYSTEMS
NEW ARMOR TANK (NAT)

DATE: 1 January 1995
UPDATE XX, DATE (As applicable)
REVISION XX, DATE (As applicable)

Program Elements
658472.031
634721.111

****

SUBMITTED BY

Joe P. M. Doe
Program Manager

1 January 1995
DATE

CONCURRENCE

Henry Armor Tank
Program Executive Officer
Missile Defense

15 February 1995
DATE

Jack J. O. Test
CDR, U.S. Army Operational Test & Evaluation Command (OPTEC)

15 February 1995
DATE

T. Ray Ning
DCS Combat, Doctrine & Development, USA TRADOC

15 February 1995
DATE

COMPONENT APPROVAL

John O.R. Mann
Deputy Under Secretary of the Army (Operations Research)

15 March 1995
DATE

BMDO APPROVAL

John Doe Missile
Director Ballistic Missile Defense Organization (BMDO)

15 April 1995
DATE

****

OSD APPROVAL

Final Approval
Director, Operational Test and Evaluation

30 May 1995
DATE

Final Approval II
Director, Test and Evaluation
Under Secretary of Defense
(Acquisition and Technology)

30 May 1995
DATE

Figure 4-4. Signature page format for programs requiring BMDO approval

TEST AND EVALUATION MASTER PLAN
FOR
ARMORED SYSTEMS
NEW ARMOR TANK (NAT)

DATE: 1 January 1995
UPDATE XX, DATE (As applicable)
REVISION XX, DATE (As applicable)

Program Elements
658472.031
634721.111

****

SUBMITTED BY

Joe P. M. Doe Program Manager	1 January 1995 DATE

CONCURRENCE

Henry Armor Tank Program Executive Officer (or Developing Agency if no PEO)	15 February 1995 DATE	*John A. F. Doe* Participating Service PEO or Developing Agency	15 February 1995 DATE
Jack I.O Test CDR U.S. Army Operational Test & Evaluation Command (OPTEC)	15 February 1995 DATE	*Joe Navy Doe* Participating Service Operational Test Agency	15 February 1995 DATE
T. Ray Ning DCS, Combat, Doctrine & Developments, USATRADOC	15 February 1995 DATE	*John M.C. Doe* Participating Service User Representative	15 February 1995 DATE

COMPONENT APPROVAL

John O. R. Mann Deputy Under Secretary of the Army (Operations Research)	15 March 1995 DATE	*Andy Air Force* Other Svc Acq Exec	15 March 1995 DATE

****

OSD APPROVAL

Final Approval Director, Operational Test and Evaluation	1 May 1995 DATE	*Final Approval* II Director, Test and Evaluation Under Secretary of Defense (Acquisition and Technology)	1 May 1995 DATE

Figure 4-5. Signature page format for multi-Service ACAT I and other ACATs designated for OSD T&E oversight for which Army is the lead Service

TEST AND EVALUATION MASTER PLAN
FOR
ARMORED SYSTEMS
NEW ARMOR TANK (NAT)

DATE: 1 January 1995
UPDATE XX, DATE (As applicable)
REVISION XX, DATE (As applicable)

Program Elements
658472.031
634721.111

****

SUBMITTED BY

Joe P. M. Doe
Program Manager

1 January 1995
DATE

CONCURRENCE

Henry Armor Tank
Program Executive Officer
(or Developing Agency if no PEO)

15 February 1995
DATE

Jack I. O. Test
CDR, U.S. Army Operational Test & Evaluation Command (OPTEC)

15 February 1995
DATE

T. Ray Ning
DCS, Combat, Doctrine & Developments, USATRADOC

15 February 1995
DATE

APPROVED BY

Final Approval
Deputy Under Secretary of the Army (Operations Research)

1 April 1995
DATE

Figure 4-6. Signature page format for ACAT II and Army special interest programs

TEST AND EVALUATION MASTER PLAN
FOR
ARMORED SYSTEMS
NEW ARMOR TANK (NAT)

DATE: 1 January 1995
UPDATE XX, DATE (As applicable)
REVISION XX, DATE (As applicable)

Program Elements
658472.031
634721.111

****

SUBMITTED BY

Joe P. M. Doe Program Manager	1 January 1995 DATE

CONCURRENCE

Joe P. M. Doe Program Executive Officer (or Developing Agency if no PEO)	15 February 1995 DATE	*John A. F. Doe* Participating Service PEO or Developing Agency	15 February 1995 DATE
Jack J. O. Test CDR U.S. Army Operational Test & Evaluation Command (OPTEC)	15 February 1995 DATE	*John Navy Doe* Participating Service Operational Test Agency	15 February 1995 DATE
T. Ray Ning DCS Combat, Doctrine & Development, USATRADOC	15 February 1995 DATE	*John M. C. Doe* Participating Service User Representative	15 February 1995 DATE

APPROVED BY

Final Approval Deputy Under Secretary of the Army (Operations Research)	1 April 1995 DATE	*Final Approval* II Other Svc Acq Exec	1 April 1995 DATE

Figure 4-7. Signature page format for multi-Service ACAT II programs for which Army is the lead Service

TEST AND EVALUATION MASTER PLAN
FOR
ARMORED SYSTEMS
NEW ARMOR TANK (NAT)
DATE: 1 January 1995
UPDATE XX, DATE (As applicable)
REVISION XX, DATE (As applicable)

SUBMITTED BY

Joe P. M. Doe	1 January 1995
Program Manager	DATE

APPROVED BY

Hand Approval	1 February 1995
Milestone Decision Authority	DATE

Figure 4-8. Signature page format for acquisition category III and IV programs and class II-V information mission area (IMA) programs not designated for OSD T&E oversight (to include multi-Service)

TIWG COORDINATION SHEET
TEMP FOR
NEW ARMOR TANK (NAT)
DATE
UPDATE XX, DATE (As applicable)
REVISION XX, DATE (As applicable)

	Signature		Date
Program Manager (TIWG Chair)	*Joe P. M. Doe*	(CONCUR/NONCONCUR)	31 December 1994
Combat Developer/ (Proponent School/Center)	*T. Ray Ning*	(CONCUR/NONCONCUR)	2 January 1995
Developmental Tester (TECOM)	*Jack D. Test*	(CONCUR/NONCONCUR)	2 January 1995
Developmental Evaluator/ Assessor (AMSAA/TECOM)	*D. T. Evaluate*	(CONCUR/NONCONCUR)	3 January 1995
Operational Tester (TEXCOM)	*Jack I. O. Test*	(CONCUR/NONCONCUR)	4 January 1995
Operational Evaluator (OEC)	*O. T. Evaluate*	(CONCUR/NONCONCUR)	5 January 1995
Logistician (AMSAA)	*John Doe Logistician*	(CONCUR/NONCONCUR)	6 January 1995
Survivability/Lethality (SLAD)	*Sam Slad*	(CONCUR/NONCONCUR)	7 January 1995
Threat Integrator*	*John Doe Spy*	(CONCUR/NONCONCUR)	8 January 1995
Other **		(CONCUR/NONCONCUR)	

* If Applicable
**Include participating service representatives for multiservice programs.

Figure 4-9. Sample TEMP/TIWG coordination sheet

COIs	COEA	MAOPRs	CTPs	ORD (Ref Para)	EDT	EUT	PPT	FDTE	LD	PQT	LFT	IOT
Issue I. Does the XXX provide Manuever Battlefield Commanders and their staffs with the informations required to support the decision making process and to enhance synchronization (Force level control) of combat action?												
1.2.1 MCS will be capable of transmitting, recieving, and processing the informatin necessary for the commander's situation report and updating the appropriate data bases with full data interity.	ISSUE 1: What is the operational effectiveness of each alternatinve? EEA 1: To what extent does each alternative meet functional requirements? EEA 2: What is the performance of each alternative? In terms of: • Situation awarenes • Common Picture of battlefield • Syncronization • Battle tempo	Transmits, recieves, and processes the information necessary for the commander's situatin report and updates the appropriate databases with full data integrity. Maximum allowabel update time Div. to Corps - 2 hr. , all others - 1 hr. with 85% successful update rate.	2. Interoperability b. Message Integrity c. Throughput			X			X			X

Figure 4-10. COIC, COEA, MAOPR, CTP, ORD crosswalk matrix

COIs	COEA	MAOPRs	CTPs	ORD (Ref Para)	EDT	EUT	PPT	FDTE	LD	PQT	LFT	IOT
1.2.2 The interaction with the MCS will provide better support to the commander and staff for timely, accurate information exchange and processing compared to currently used methods. This includes the commander's and staff's ability to effectively monitor the combat situaltin, including the status of available resources, and redirect assetes for use in the accoplishment of the tactical mission. A majority of htc commanders staff employing MCS must indicate that it improves their operations.	NOT A COEA ISSUE	A majority of the commanders and staff employing MCS must indicate it improves the operations.	1. b Expansion/degree of Designed Flexibility.	Page 3 Paragraph 4 a (Blk III)		X						X

Requirements		Tests	
COIs	Critical Operational Issues	EDT	Engineering Development Test
COEA	Cost and Operational Effectiveness	EUTE	Early User Test and Experimentation
MAOPRs	Minimum Acceptable Operationmal Performance Requirements	PPT	Production Prove Out Test
CTPs	Critical Tecnical Paramcters	PQT	Production Qualification Test
ORD	Operational Requirements Document	LD	Logistic Demonstration
		FDTE	Force Development Test and Experimentation
		LFT	Live Fire Test
		IOT	Initiaal Operational Test

Figure 4-10. COIC, COEA, MAOPR, CTP, ORD crosswalk matrix—Continued

Critical Events for Integrated Scheduling

- **Milestones I, II, III, First Unit Equipped (FUE), Initial Operational Capability**
- **Formal Solicitation Release**
  - Demonstration Validation (Dem-Val) RFP Release
  - Low Rate Initial Production (LRIP) RFP Release
  - Engineering & Manufacturing Development RFP Release
  - Full Rate Production (FRP) Long Lead RFP Release
- **Contract Award or Event**
  - Demonstration Validation Award
  - Engineering & Manufacturing Development Award
  - LRIP Long Lead Item Award
  - LRIP Options
  - FRP Long Lead Award
  - Preliminary Design Review (PDR)
  - Critical Design Review (CDR)
- **Deliveries**
  - Brassboard
  - Prototype (Designate Quantity)
  - LRIP (Designate Quantity)
  - Production (Designate Quantity)
- **Developmental Test & Evaluation (DT&E)**
  - Developmental Tests
  - Pre-Milestone II:
    - -- Technical Feasibility Test (TFT)
    - -- Engineering Development Test (EDT)
  - Pre-Milestone III:
    - -- Production Qualification Test (PQT)
    - -- Production Prove-Out Test (PPT)
    - -- Live Fire Test (LFT)
    - -- Logistic Demonstration (LD)
  - Production and Deployment Phase
    - -- Production Verification Test (PVT)
    - -- First Article Test (FAT)

Figure 4-11. Critical events for integrated scheduling

• **Operational Test & Evaluation (OT&E)**
- Early Operational Assessment
- Operational Assessment
- Operational Tests
- Pre-Milestone II:
  -- Early User Test (EUT)
  -- Early User Experiment (EUE)
- Pre-Milestone III:
  -- Limited User Test (LUT)
  -- Initial Operational Test (IOT)
- Production and Deployment Phase
  -- Follow-on Operational Test (FOT)
- TRADOC Test and Experimentation
  -- Force Development Test (FDT)
  -- Force Development Experiment (FDE)
  -- Concept Evaluation Program Test (CEP)
  -- Battle Lab Experimentation

• **Funding** - Cumulative by fiscal year
- include all funds expended by the PM, support agencies and test agencies

- MRTFB Reimbursable -- obtain data from the program planning forecast document that addresses developmental test at U.S. Army Test and Evaluation Command (TECOM) test facilities and other DOD managed facilities.
- RDT&E
  -- include all RDT&E expenditures, not just T&E related
  -- include DT&E and OT&E costs
  -- include LRIP and test articles for DT&E and IOT&E
- Procurement -- as described in the program baseline

For ACAT III and IV programs, not designated for OSD T&E oversight, funding information on the Integrated Program Schedule is optional.

Figure 4-11. Critical events for integrated scheduling—Continued

APPENDIX C

PROGRAM POINTS OF CONTACT (FORMAT)

NAME	ORGANIZATION	PHONE
LTC John Doe [System PM]	PM, New Tank ATTN: SFAE-ASM-BT-Q Warren, MI 48397	COM (313) 456-7891 DSN 786-7891 FAX (313) 456-1234 jdoe@tank.com.mil
COL John Doe [PEO Representative]	PEO Tanks ATTN: SFAE-AR Warren, MI 48397	COM (313) 678-3456 DSN 786-2345 FAX (313) 456-7890 peo@tacom.army.mil
Mr. John Doe [TIWG Member]	PM ITTS ATTN: AMCPM-ITTS 12350 Research Parkway Orlando, FL 32826	COM (407) 380-1234 DSN 960-1234 FAX (407) 380-4546 itts@orlando.army.mil
Ms Jane Doe [TIWG Member]	Commander, USA NGIC 1111 N. 11th St Charlotesville, VA 22901	COM (804) 432-1234 DSN 122-1234 FAX (804) 432-5678 msdoe@dia.com
LTC Sam Doe [TIWG Member]	U.S. Army OPTEC ATTN: CSTE-AA 4501 Ford Ave Park Center IV Alexandria, VA 22302	COM (703) 567-1234 DSN 289-1234 FAX (703) 567-5678 sdoe@optec.com
Mr. Henry Doe [User Representative]	U.S. Army TRADOC ATTN: ATTR-BB Fort Monroe, VA 23456	COM (804) 345-7890 DSN 727-7890 FAX (804) 345-5678 hdoe@tradoc.com

Figure 4-12. Appendix C. Points of Contact (format)

Chapter 5
Format and Contents for Information Mission Area Programs

Section I
Introduction

5–1. General

a. The format for all Army developed Major Automated Information System Review Council (MAISRC) TEMPs will be in accordance with DOD 5000.2–M, part 7. Specific content guidance appropriate for Army preparation of MAISRC TEMPs is contained in the following sections. Table 5–1 and figure 5–1 show Army interpretation of the DOD guidance.

c. Signature page format and layout for programs by MAISRC decision level are provided at figure 5–2. A signature page format and layout for non-MAISRC programs is provided at figure 4–8. Program element information can be obtained from the current year version of DFAS-IN Manual 37–100–XX.

d. An example of a TIWG coordination sheet is at figure 5–3. The TIWG coordination sheet should show the specific participants of a program, for example the TIWG chair should show the PM, program name; the functional proponent should be identified; Information Systems Engineering Command (ISEC) should be identified as the developmental evaluator, Operational Evaluation Command (OEC) as the operational evaluator, and so forth. Support contractor signatures are not acceptable. Spell out the name and organization of the signatory (signature block).

e. A TEMP will include a signature page, a TIWG coordination sheet as shown in figure 5–3, and a TEMP outline as shown in table 5–2.

Section II
TEMP Format and Contents for Information Mission Area Systems

5–2. Part I ("System Introduction")

a. "Mission Description." Reference the MNS and summarize the mission need described therein as follows:

(1) Define the need in terms of mission, objectives and general capabilities.

(2) System capabilities are detailed in paragraph 2 and 4 of the MNS and part 1, section 4, of the System Decision Paper (SDP). Functional process improvement is detailed in chapter 3 of the MNS or part 2, section 1, of the SDP.

b. "System Threat Assessment." Reference the system threat assessment and summarize the threat environment described herein. This is not applicable for IMA systems unless they are developed to counter a specific threat. If a STAR is prepared for the system, summarize the operational threat environment from paragraph 4c of the STAR and the system specific threat from paragraph 4e.

c. "Minimum Acceptable Operational Performance Requirements." Reference the Operational Requirements Document and summarize the critical operational effectiveness and suitability parameters and constraints (manpower, personnel, training, software, computer resources, transportation (lift), and so forth) described therein.

(1) Operational requirements are specified in section 2.2 of the Functional Description, or in sections 3.5.2 and 3.7–3.12 of the Software Requirements Specification (DI-MCCR–80025A).

(2) For systems using accelerated techniques and automated tools, use the High Level Functional Description (HLFD).

d. "System Description." Provide a brief description of the system design, to include the following items:

(1) Key features and subsystems, both hardware and software (such as architecture, interfaces, security levels, reserves, and so forth), which allow the system to perform its required operational mission. Key features of the total system are identified in chapter 3B of the MNS and section 4 of the FD, or in chapter 3B of the MNS and section 3 of the System Specification (DI-CMAN–80008A), as applicable.

(2) Interfaces with existing or planned systems that are required for mission accomplishment. Address relative maturity and integration and modification requirements for nondevelopment items. Include interoperability with existing and/or planned systems of other DOD Components or allies. Interfaces are identified in chapter 4C of the MNS, section 5.4 of the FD, and section 3 of the System Specification, or in section 3 of the Interface Requirements Specification (DI-MCCR-80026A), as appropriate.

(3) Critical system characteristics (see DODI 5000.2, sec 4–C) or unique support concepts resulting in special test and analysis requirements (for example, post deployment software support, hardness against nuclear effects; resistance to countermeasures; and development of new threat simulation, simulators, or targets). Unique system characteristics are identified in chapter 4A of the MNS.

(4) Include nondevelopmental items or commercial-off-the-shelf software and any required interoperability with existing or planned systems or other DOD Components or allies.

e. "Critical Technical Parameters."

(1) Critical technical parameters are defined as those measurable critical system characteristics, including software, that allow, when achieved, the attainment of the minimum acceptable operational performance requirements.

(2) Software critical technical parameters may include language, architecture, interfaces, supportability, security levels, time, memory, and input/output reserves.

(3) A matrix relating the critical required technical parameters may be derived from information found in the System/Subsystem Specification and chapter 2.5 of the User's Manual, or in section 3.6 of the Software Specification (DI-MCCR-80025A), as applicable.

(4) List in a matrix format (see table 5–1) the critical technical parameters of the system (including software maturity and performance measures) that have been evaluated or will be evaluated during the remaining phases of developmental testing. Critical technical parameters are derived from the Operational Requirements Document, critical system characteristics (see DODI 5000.2, part 4) and technical performance measures (see DODI 5000.2, sec 6–A) and should include the parameters in the acquisition program baseline (see DOD 5000.2–M, part 14). Next to each technical parameter, list the accompanying objectives and thresholds as illustrated by table 5–1.

(a) "Critical technical parameters"—obtained from the software specification and other related documents. For systems using accelerated techniques and automated tools, critical technical parameters are derived from the HLFD and its versions as it transitions to become the Functional Description. Reference the source from which the parameter and value are derived.

(b) "Total events"—the developmental tests conducted wherein the parameters are tested. Tests should be outlined in part III of the TEMP.

(c) "Technical objective for each event"—the value expected to be attained at that stage of development.

(d) "Location"—the place where the test will be performed.

(e) "Schedule"—the fiscal quarter when the test will be initiated.

(f) "Decision supported"—the program milestone or review that will consider the results of this test.

(g) "Demonstrated value"—state the actual value obtained from testing.

(h) A MS I (preliminary) TEMP is not expected to contain detailed requirements. The TEMP update to support milestone II should include detailed values.

(i) Highlight critical technical parameters that must be demonstrated before entering the next acquisition or operational test phase and ensure that the actual values which have been demonstrated to date are included in the last column.

(5) Discuss the relationship between the critical technical parameters and the minimum acceptable operational performance requirements in the Operational Requirements Document.

5–3. Part II ("Integrated Test Program Summary")

a. "Integrated Test Program Schedule."

(1) As illustrated in figure 5–1 (can be a fold-out chart), display the integrated time sequencing of the critical test and evaluation phases and events, related activities, and planned cumulative funding expenditures by appropriation.

(2) Include event dates such as milestone decision points; operational assessments; test article availability; software version releases; appropriate live fire test and evaluation, and operational test and evaluation; low rate initial production deliveries; full rate production deliveries; initial operational capability; full operational capability; and statutorily required reports.

(3) A single schedule should be provided for multi- Service or Joint and Capstone TEMPs showing all DOD Component system event dates.

(a) The integrated test program schedule will be divided into seven major areas: program milestones; program acquisition events; contract release and awards; program deliverables; developmental test and evaluation; operational test and evaluation; and program funding.

(b) Information/data should be obtained from the master schedule, section F of the Management Plan (MP).

(c) The schedule must cover the acquisition and test and evaluation program through full operational capability.

(d) The integrated time sequencing of critical events (listed in figure 5–4) will be reflected as appropriate.

b. "Management."

(1) Discuss the test and evaluation responsibilities of all participating organizations (developers, testers, evaluators, users) to include the following:

(a) Identify TIWG members and their roles—see table 5–3. Reference the TIWG charter for specific responsibilities. (See AR 73–1 and DA Pam 73–1, chap 8.) The TIWG charter must be included as a reference in appendix A ("Bibliography").

(b) An outline of T&E responsibilities of all participating organizations is defined in section 2G of the program manager/project manager charter.

(2) Provide the date (fiscal quarter) when the decision to proceed beyond low-rate initial production is planned. (Low-rate initial production quantities required for operational test must be identified for the Director of Operational Test and Evaluation's approval prior to milestone II for acquisition category I programs and other acquisition category programs designated for Office of the Secretary of Defense T&E oversight.)

(3) Provide the date (fiscal quarter) when the decision to proceed to milestone III certification is planned. If the system is being developed through an incremental acquisition strategy, provide the date (fiscal quarter) when the decision to proceed to MS III certification is planned and briefly outline the extent of incremental deployment activities (prototype, test bed sites, and so forth) prior to MS III certification. (The extent of incremental deployment before Initial Operational Test and Evaluation must be identified prior to MS II for OSD and Army MAISRC systems.) For incremental development programs, milestone II is considered as equivalent to the low-rate initial production decision point.

(a) The quantity of items needed for IOT is recommended by OPTEC in coordination with the program manager and included for approval by DOT&E for programs having OSD test and evaluation oversight.

(b) The quantity of items needed for IOT for all other programs are included as recommended by OPTEC.

(4) Identify and discuss any operational issues and vulnerability and lethality live fire test requirements that will not be addressed before proceeding beyond low-rate initial production.

5–4. Part III ("Developmental Test and Evaluation Outline")

a. "Developmental Test and Evaluation Overview." Explain how developmental test and evaluation will—verify the status of engineering and manufacturing development progress, verify that design risks have been minimized, substantiate achievement of contract technical performance requirements, and be used to certify readiness for dedicated operational test.

(1) Specifically identify any technology/subsystem that has not demonstrated its ability to contribute to system performance and ultimately fulfill mission requirements.

(2) Specifically identify the degree to which system hardware and software design has stabilized so as to reduce manufacturing and production decision uncertainties.

(3) Summarize the entire developmental test and evaluation program.

(4) Present a narrative walk-through of the integrated schedule, discussing the interrelationships between tests, developmental and operational, and between tests and milestones. Do not duplicate details that will be found in paragraph IIIc of the TEMP ("Future Developmental Test and Evaluation"). The purpose of this overview is to identify how the individual tests fit within the framework of the overall program and the continuous evaluation process. Some of the topics that need to be addressed in this paragraph include—

(a) Early developmental tests that will be performed to mitigate technical risks in the program that are defined in annex D, "Risk Assessment" in the Integrated Program Summary (reference DOD 5000.2–M, part 4, sec E).

(b) Identification of developmental tests that will be used to demonstrate that the test item is safe, that the technical manuals are verified and validated and ready for use in a following or concurrent operational test.

(c) Identification of the test, usually the Software Qualification Test (SQT), that will be performed to validate that the system meets the program's technical performance requirements that are usually contractually mandated in a specification.

(5) The following areas need to be addressed throughout developmental test and evaluation (they are addressed in general in the DT&E overview paragraph and specifically in the description, objective, and so forth of each of the developmental tests addressed in the future DT&E paragraph):

(a) Reliability and Maintainability (reference DODI 5000.2, part 6, sec C).

(b) Human Factors (reference DODI 5000.2, part 6, section H).

(c) System Safety, Health Hazards and Environmental Impact (reference DODI 5000.2, part 6, sec I).

(d) Discuss the metrics that will be used to determine software status and evaluate progress toward software maturity in support of key decision points. Show how the metrics in each phase relate to those in previous and subsequent phases.

(e) Integrated Logistics Support (reference DODI 5000.2, part 7.

b. "Developmental Test and Evaluation to Date."

(1) Identify completed developmental test and evaluation by noting on the matrix of critical technical parameters those parameters that have been demonstrated.

(2) Update the critical technical parameters matrix in part I.

(3) For parameters not met, provide a brief explanation as to why not and state the impact on performance. Identify any future test that will re-address parameters.

(4) If during any prior T&E phase or event, mission critical deficiencies were identified, a discussion of the nature of each deficiency, corrective action required, or the schedule for the DT&E retest verification, should be included, as derived from section 3 of the Test Analysis report.

(5) A detailed discussion of the results of testing is not required.

(6) Test and evaluation reports prepared to date must be included as references in appendix A ("Bibliography").

c. "Future Developmental Test and Evaluation." Discuss all remaining planned developmental test and evaluation, beginning with the date of the current TEMP revision and extending through completion of production. Place emphasis on the next phase of

testing. For each test within each remaining acquisition phase address the following items: configuration description, DT&E objectives, DT&E events, scope, basic scenarios, and limitations, as illustrated by paragraphs (1) and (2) below:

(1) *Software Development Test (SDT).*

(a) Configuration description (of test item).

(b) Test and Evaluation Objectives.

(c) Events, Scope of Testing, and Basic Scenarios.

(d) Limitations.

(2) *Software Qualification Test.*

(a) Configuration description (of test item).

(b) Test and Evaluation Objectives.

(c) Events, Scope of Testings, and Basic Scenarios.

(d) Limitations.

For those critical technical parameters where demonstrated value did not meet the threshold or objective, planned testing must ensure that these parameters will be re-addressed.

(3) *"Configuration Description."* Summarize the functional capabilities of the system's developmental configuration and how they differ from the production model. List the difference between the system to be tested and the objective system, to include software. For some systems, a summary of future DT&E system hardware and software-functional- capability, and how it is expected to differ from the configuration planned for deployment may be found in the Test Plan.

(4) *"Developmental Test and Evaluation Objectives."* State the test objectives for this phase in terms of the critical technical parameters to be confirmed. Identify any specific technical parameters which the milestone decision authority has designated as exit criteria and/or directed to be demonstrated in a given phase of testing. Discuss problem areas, if any, identified by the use of software metrics and describe how future developmental test and evaluation events will measure progress toward elimination of these problem areas.

(5) *"Events, Scope of Testing, and Basic Scenarios."* Summarize the test events, test scenarios and the test design concept. Quantify the testing in terms of number of test hours, test events, test firings, and so forth. List the specific threat systems, surrogates, countermeasures, component or subsystem testing, and testbeds, whose use are critical to determine whether developmental test objectives are achieved. As appropriate, particularly if an agency separate from the test agency will be doing a significant part of the evaluation, describe the methods of evaluation. List all models and simulations to be used and explain the rationale for their credible use. Describe how performance in natural environmental conditions representative of the intended area of operations (for example, temperature, pressure, humidity, fog, precipitation, clouds, blowing dust and sand, icing, wind conditions, steep terrain, wet soil conditions, high sea state, storm surge and tides, and so forth) and interoperability and compatibility with other weapon and support systems as applicable will be tested.

(a) The resources identified must correspond to those listed in part V.

(b) Include a discussion of any test databases and/or remote terminal emulators to be used and their relationship to the objective system environment.

(6) *"Limitations."* Discuss the test limitations that may significantly affect the evaluator's ability to draw conclusions, state the impact of these limitations, and explain resolution approaches.

d. "Live Fire Test and Evaluation." Include a description of the overall LFT&E strategy for the item; critical LFT&E issues; required levels of system vulnerability/lethality; the management of the LFT&E program; LFT&E schedule, funding plans and requirements; related prior and future LFT&E efforts; the evaluation plan and shot selection process; and major test limitations for the conduct of LFT&E. LFT&E resource requirements (including test articles and instrumentation) will be appropriately identified in the T&E Resource Summary.

Note. This paragraph is generally not applicable for IMA systems, except when development includes protective shelters.

5–5. Part IV ("Operational Test and Evaluation Outline")

a. "Operational Test and Evaluation Overview." The primary purpose of operational testing and evaluation is to verify that operationally effective and operationally suitable systems are approved for production that meet the mission needs and minimum operational performance requirements of the operating forces.

(1) The TEMP will show how program schedule, test management structure, and required resources are related to operational requirements, critical operational issues, test objectives, and milestone decision points. Testing will evaluate the system (operated by typical users) in an environment as operationally realistic as possible, including threat representative hostile forces and the expected range of natural environmental conditions.

(2) Summarize the entire operational test and evaluation program. Present a narrative "walk-through" of the integrated schedule discussing the interrelationships between contractor, Government, developmental and operational tests, models and simulations and the milestones they support. Do not duplicate the details that are provided in paragraph d, "Future Operational Test and Evaluation." The purpose of the overview is to give a quick, concise look at the overall test program, explaining the many interrelationships and opportunities to conduct continuous evaluation. Some of the topics that need to be addressed include—

(a) Identification of contractor and developmental tests that will be used as part of an operational evaluation or assessment.

(b) Identification of simulations that will be used to augment and extend operational testing as part of an operational evaluation or assessment.

b. "Critical Operational Issues (COI)."

(1) List in this paragraph the approved COI. The COI are the operational effectiveness and operational suitability issues (not parameters, objectives or thresholds) that must be examined in OT&E to evaluate/assess the system's capability to perform its mission.

(2) A COI is typically phrased as a question that must be answered in order to properly evaluate operational effectiveness (for example, "Will the system detect the threat in a combat environment at adequate range to allow successful engagement?") and operational suitability (for example, "Will the system be safe to operate in a combat environment?").

(3) Some COI will have critical technical parameters and minimum acceptable operational performance requirements or thresholds. Individual attainment of these attributes does not guarantee that the COI will be favorably resolved. The judgment of the operational test agency is used by the DOD Component to determine if the critical operational issue is favorably resolved.

(4) If every COI is resolved favorably, the system should be operationally effective and operationally suitable when employed in its intended environment by typical users.

(a) Functional proponent-developed and -approved COIC are required for all Army and OSD MAISRC programs for MS I.

(b) Approval of COICs by DCSOPS and the Director of Information Systems for Command, Control, Communications, and Computers (DISC4) is required for Army and OSD MAISRC systems at MS II and beyond. The DISC4 approves COIC for all information systems except those having tactical missions. DA DCSOPS approves COIC for all information systems with a tactical mission (AR 73–1).

(c) Include the approved COICs in their entirety in the TEMP or attach as an annex; this includes issue, scope, criteria and rationale.

(d) Reference the COIC approval document in appendix A ("Bibliography").

c. "Operational Test and Evaluation to Date." Identify and date test reports that detail the results of testing and operational assessments to date. Indicate critical operational issues that were resolved (satisfactory, unsatisfactory, yes, no, and so forth), partially resolved, or unresolved at the completion of each phase of testing.

(1) Discuss the results related to the resolution of the criteria in addition to the overall issue.

(2) Ensure that all test reports referenced are listed in appendix A ("Bibliography"). Reports must be available if requested.

(3) Based on the previously identified operational issues, summarize what has been learned about the maturity of the software during operational testing. Show how operational test results from interim hardware and software configurations apply to configurations intended for deployment. Identify differences between tested software, software planned for the current phase, and software to be deployed. Discuss the importance of these differences.

d. "Future Operational Test and Evaluation." For each remaining phase of operational test and evaluation, separately address the following:

(1) *Identification of operational tests.* Identify operational tests that will be conducted and the developmental tests that will provide source data for operational evaluation or assessment. When developmental tests are identified, a paragraph titled "Operational Test and Evaluation Events, Scope of Testing, and Scenarios" (see (6) below) should define the data that will be taken from the developmental test for the evaluation or assessment. This will ensure that the developmental testers and evaluators, by their signature on the TEMP, have agreed to collect and provide that data to the operational evaluator.

(2) *Description of accreditation.* Describe how models will be accredited for use in specific operational tests. The approval vehicle for accreditation is an accreditation plan as outlined in DUSA(OR) memorandum dated 30 October 1989, subject: Verification, Validation, and Accreditation of Models. Reference the accreditation plan in appendix A ("Bibliography"). Part V ("Resource Summary") will identify the resources necessary to perform the validation and/or accreditation.

(3) *Description of tests.* If more than one test is in a phase, the information contained in paragraphs *(a)* through *(d)* below should be included for each test. For example, if during the development phase, a limited user test (LUT) were planned, the following information should be addressed for that test:

(a) Configuration Description (of test item).

(b) Test and Evaluation Objectives.

(c) Events, Scope of Testing and Scenarios.

(d) Limitations.

Note. Either list each sub-element for the developmental test to be used for data or refer to the applicable paragraph in part III that contains the information.)

(4) *"Configuration Description."* Identify the configuration of the system to be tested during each phase, and describe any differences between the tested system and the system that will be fielded, including, where applicable, software maturity performance and criticality to mission performance, and the extent of integration with other systems with which it must be interoperable or compatible. Characterize the system (for example, prototype, engineering development model, production representative, or production configuration).

(5) *"OT&E Objectives."* State the test objectives, including the minimum acceptable operational performance requirements and critical operational issues, to be addressed by each phase of OT&E and the milestone decision review(s) supported. The OT&E that supports the beyond low-rate initial production decision should have test objectives that examine all areas of operational effectiveness and suitability.

(a) Human performance issues must be addressed (reference DODI 5000.2, part 7, sec B).

(b) Discuss the relationship between OT&E objectives and the software characteristics which affect critical operational issues.

(c) For FOT&E, identify major deficiency corrections to be verified. Operational tests should be designed to assure that software is fault tolerant and supportable.

(6) *"Operational Test and Evaluation Events, Scope of Testing, and Scenarios."* Summarize the scenarios and identify the events to be conducted, type of resources to be used, threat simulators and the simulation(s) to be employed, type of representative personnel who will operate and maintain the system, the status of the logistic support, the operational and maintenance documentation that will be used, the environment under which the system is to be employed and supported during testing, and the plans for interoperability and compatibility testing with other United States/Allied weapon and support systems as applicable, and so forth. Identify planned sources of information (for example, developmental testing, testing of related systems, modeling, simulation, and so forth) that may be used by the operational test agency to supplement this phase of operational test and evaluation. Whenever models and simulations are to be used, explain the rationale for their credible use. If operational test and evaluation cannot be conducted or completed in this phase of testing, and the outcome will be an operational assessment instead of an evaluation, this should be clearly stated and the reason(s) explained. Include a description of the relationship between software functions being tested and test scenario events that will cause that function to be exercised. Identify load levels to be used and their relationship to the required operational environment.

(7) *"Limitations."* Discuss the test limitations including threat realism, resource availability, limited operational (military, climatic, nuclear, and so forth) environments, limited support environment, maturity of tested system, safety, and so forth, that may alter the resolution of affected critical operational issues. Indicate the effect of the test limitations on the ability to resolve critical operational issues and the ability to formulate conclusions regarding operational effectiveness and operational suitability. After each limitation, indicate in parenthesis the critical operational issues affected. Identify any factors that may inhibit realistic OT of the software. Constraints imposed by software maturity or availability of resources and simulators should be given, along with their impact on critical operational issues.

5–6. Part V ("Test and Evaluation Resource Summary")

Provide a summary (preferably in a table or matrix format) of all key test and evaluation resources, both Government and contractor, which will be used during the course of the acquisition program. Existing capabilities that are key to accomplishing the test program need to be included, specifically, all those for which use is known to be restricted or where a significant upgrade or improvement is needed. Include requirements for a new or unique capability or item that needs to be acquired or developed to support the test program. Information addressing paragraphs *a* through *f*, below, should be included in the matrix or table. At a minimum, the matrix should identify the item, the quantity required, the location, the test event or time-frame when needed, the resources required to be obtained, and the organization or activity responsible for acquisition or development. The developmental tester and operational tester should provide input specific to their requirements and indicate which requirements were identified by each tester. Resource requirements are found in the Management Plan.

a. Test articles. Identify the actual number of and time requirements for all test articles, including key support equipment and technical information required for testing in each phase by major type of developmental test and evaluation and operational test and evaluation. If key subsystems (components, assemblies, subassemblies or software modules) are to be tested individually, before being tested in the final system configuration, identify each subsystem in the TEMP and the quantity required. Specifically, identify when prototype, engineering development, pre-production, or production models will be used.

b. Test sites and instrumentation. Identify the specific test ranges or facilities to be used for each type of testing. Compare the requirements for test ranges or facilities dictated by the scope and content of planned testing with existing and programmed test range or facility capability and highlight any major shortfalls, such as the inability to test under representative natural environmental conditions. Identify instrumentation that must be acquired specifically to conduct the planned test program.

(1) Include in this paragraph software facilities and tools to support testing identified in parts III and IV.

(2) Address instrumentation that must be developed or procured. Clearly identify the test investment requirement.

c. Test support equipment. Identify test support equipment that

must be acquired specifically to conduct the test program. Address only new test support equipment. This includes software test drivers, emulators, simulators, or diagnostics, if applicable, to support identified testing. Identify unique or special calibration requirements associated with this test support equipment.

d. Threat systems/simulators. Identify the type, number, availability, and fidelity requirements for all threat systems/simulators. Compare the requirements for threat systems/simulators with available and projected assets and their capabilities. Highlight any major shortfalls. Each threat simulator shall be subjected to validation procedures to establish and document a baseline comparison with its associated threat and to ascertain the extent of the operational and technical performance differences between the two throughout the simulator's life-cycle. This paragraph is generally not applicable for IMA systems, except for theater/tactical systems.

e. Test Targets and expendables. Identify the type, number, and availability requirements for all targets, flares, chaff, sonobuoys, smoke generators, acoustic countermeasures, and so forth, that will be required for each phase of testing. Identify any major shortfalls. This paragraph is not applicable for IMA systems.

f. Operational force test support. For each test and evaluation phase, identify the type and timing of aircraft flying hours, ship steaming days, and on-orbit satellite contacts/coverage, and other critical operating force support required. Include size, location, and type of unit required.

g. Simulation, models, and testbeds. For each test and evaluation phase, identify the system simulations required, including computer-driven simulation models and hardware/software-in-the-loop testbeds. Identify the resources required to validate and certify their credible usage or application before their use. Include only those simulations, models, and testbeds that will be used to extend testing and/or used in evaluation. This includes feeder models.

h. Special requirements. Discuss requirements for any significant non-instrumentation capabilities and resources such as special data processing/data bases, unique mapping/charting/geodesy products, extreme physical environmental conditions, or restricted/special use air/sea/landscapes.

i. Test and evaluation funding requirements. Estimate, by fiscal year and appropriation line number (program element), the funding required to pay direct costs of planned testing. By fiscal year, state the funding currently appearing in those lines (program elements). Identify any major shortfalls.

(1) Use of a table or matrix is preferred.

(2) Show potential shortfalls.

j. Manpower/personnel training. Identify manpower/personnel and training requirements and limitations that affect test and evaluation execution. The preliminary TEMP should project the key resources necessary to accomplish demonstration and validation testing and early operational assessment. The preliminary TEMP should estimate, to the degree known at milestone I, the key resources necessary to accomplish developmental test and evaluation, live fire test and evaluation, and operational test and evaluation. These resources should include elements of the National Test Facilities Base (which incorporates the Major Range and Test Facility Base, capabilities designated by industry and academia, and Major Range and Test Facility Base test equipment and facilities), unique instrumentation, threat simulators, and targets. As system acquisition progresses, the preliminary test resource requirements shall be reassessed and refined, and subsequent TEMP updates shall reflect any changed system concepts, resource requirements, or updated threat assessments. Any resource shortfalls that introduce significant test limitations should be discussed with planned corrective action outlined. This paragraph contains overall guidance for preparing a preliminary TEMP, that is, a TEMP to support milestone I. It is not a separate paragraph to be addressed in the TEMP.

5–7. Appendixes

a. Appendix A ("Bibliography").

(1) Cite all documents referred to in the TEMP.

(2) Cite all reports documenting developmental and operational testing and evaluation.

b. Appendix B ("Acronyms"). List and define all acronyms used in the TEMP.

c. Appendix C ("Points of Contact"). Provide a list of points of contact as illustrated by figure 4–12.

Table 5–1
Sample critical technical parameters matrix

Critical technical parameters	Total events	Technical objective for each test event	Location	Schedule	Decision supported	Demonstrated value
Measurable parameter with reference	Single event or test phase	Measurable technical value	Test facility	Test period	Milestone, in-process review or major event	(Include the actual value)
Maximum query response time 15 seconds (Reference)	EUT SDT SQT	20 sec 15 sec 15 sec	ABC facility DEF facility DEF facility	1Q FY-XX 2Q FY-XX 3Q FY-XX	MS II IPR MS IIIc	X Y Z

Notes:
This matrix depicts the evaluation criteria to assess developmental progress.

Table 5–2
Test and Evaluation Master Plan outline (format)

Part	Page number
PART I SYSTEM INTRODUCTION (2 pages suggested - refer to annexes)	
a. Mission Description	xx
b. System Threat Assessment	xx
c. Minimum Acceptable Operational Performance Requirements	xx
d. System Description	xx
e. Critical Technical Parameters[1]	xx
PART II INTEGRATED TEST PROGRAM SUMMARY (2 pages suggested)	
a. Integrated Test Program Schedule[2]	xx
b. Management	xx

Table 5–2
Test and Evaluation Master Plan outline (format)—Continued

Part	Page number
PART III DEVELOPMENTAL TEST AND EVALUATION OUTLINE (10 pages suggested)	
a. Developmental Test and Evaluation Overview	xx
b. Developmental Test and Evaluation to Date	xx
c. Future Developmental Test and Evaluation	xx
d. Live Fire Test and Evaluation	xx
PART IV OPERATIONAL TEST AND EVALUATION OUTLINE (10 pages suggested)	
a. Operational Test and Evaluation Overview	xx
b. Critical Operational Issues	xx
c. Operational Test and Evaluation to Date	xx
d. Future Operational Test and Evaluation	xx
PART V TEST AND EVALUATION RESOURCE SUMMARY (6 pages suggested)	
a. Test Articles	xx
b. Test Sites and Instrumentation	xx
c. Test Support Equipment	xx
d. Threat Systems/Simulators	xx
e. Test Targets and Expendables	xx
f. Operational Force Test Support	xx
g. Simulations, Models and Testbeds	xx
h. Special Requirements	xx
i. T&E Funding Requirements	xx
j. Manpower/Personnel Training	xx
APPENDIX A Bibliography	A-1
APPENDIX B Acronyms	B-1
APPENDIX C Points of Contact	C-1
ANNEXES/ATTACHMENTS (if appropriate)	

Notes:
[1] See table 5-1.
[2] See figure 5-1.

Table 5–3
TIWG members and roles (IMA programs)

TIWG MEMBER	TIWG ROLE
Program Manager (any given system)	TIWG Chairman
Proponent Agency	Program Functional Proponent
Operational Evaluation Command (OEC)	Program Operational Evaluator
Test and Experimentation Command (TEXCOM)	Program Operational Tester
Information Systems Engineering Command (ISEC)	Program Developmental Evaluator/Assessor Program Developmental Tester
Information Systems Support Center (ISSC)	System Logistician
Training and Doctrine Command (TRADOC)	Threat Integrator*
Air Force Operational Test & Evaluation Command; Marine Corps Operational Test and Evaluation Agency; Operational Test and Evaluation Force (Navy)	Participating Service operational test representative if TIWG has multi-Service participation.
Participating Service User Representative (if multi-Service)	Participating Service Functional Proponent (if multi-Service)

Notes:
* Required for theater/tactical systems.

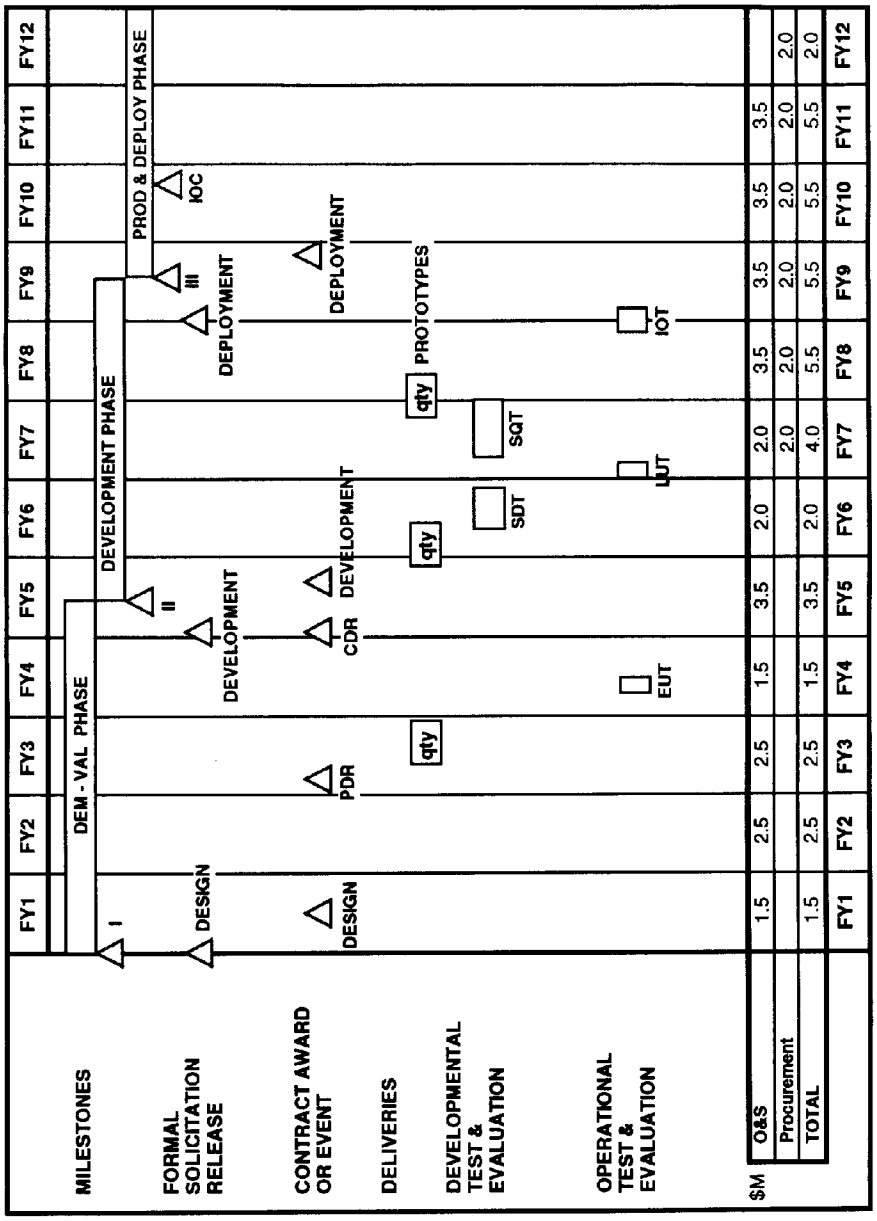

Figure 5-1. Integrated test program schedule (illustrative example)

TEST AND EVALUATION MASTER PLAN
FOR
COMMAND AND CONTROL SYSTEMS
INFORMATION MANAGEMENT NETWORK (IMN)

DATE: 1 January 1995
UPDATE XX, DATE (As applicable)
REVISION XX, DATE (As applicable)

Program Elements
637925.111
641764.222

****

SUBMITTED BY

Joe P. M. Doe
Program Manager

1 January 1995
DATE

CONCURRENCE

Henry Network
Program Executive Officer
(or Developing Agency if no PEO)

15 February 1995
DATE

Jack I. O. Test
CDR U.S. Army Operational Test & Evaluation Command (OPTEC)

15 February 1995
DATE

John Hancock
Functional Proponent

15 February 1995
DATE

COMPONENT APPROVAL

John O.R. Mann
Deputy Under Secretary of the Army (Operations Research)

15 March 1995
DATE

****

OSD APPROVAL

Final Approval
Director, Operational Test and Evaluation

30 April 1995
DATE

Final Approval
Director, Test and Evaluation
Under Secretary of Defense
(Acquisition and Technology)

30 April 1995
DATE

Figure 5-2. Signature page format for OSD Major Automated Information System Review Committee (MAISRC) programs

TIWG COORDINATION SHEET
TEMP FOR
INFORMATION MANAGEMENT NETWORK (IMS)
DATE
UPDATE XX, DATE (As applicable)
REVISION XX, DATE (As applicable)

	Signature		Date
Program Manager (TIWG Chair) (Name/Organization)	*Joe P. M. Doe*	(CONCUR/NONCONCUR)	31 December 1994
Functional Proponent/ (Center/Agency)	*John Hancock*	(CONCUR/NONCONCUR)	2 January 1995
Developmental Tester (ISEC)	*Jack D. Test*	(CONCUR/NONCONCUR)	3 January 1995
Developmental Evaluator/ Assessor (ISEC)	*D. T. Evaluate*	(CONCUR/NONCONCUR)	4 January 1995
Operational Tester (TEXCOM)	*Jack J. O. Test*	(CONCUR/NONCONCUR)	5 January 1995
Operational Evaluator (OEC)	*O. T. Evaluate*	(CONCUR/NONCONCUR)	6 January 1995
Logistician	*John Doe Logistician*	(CONCUR/NONCONCUR)	7 January 1995
Threat Integrator*	*John Doe Spy*	(CONCUR/NONCONCUR)	8 January 1995
Other **		(CONCUR/NONCONCUR)	

* Required for Theater/Tactical systems
**Include participating service representatives for multiservice programs.

Figure 5-3. TEMP/TIWG coordination sheet

Critical Events for Integrated Scheduling (IMA Programs)

- **Milestones I, II, III, Initial Operational Capability**
- **Formal Solicitation Release**
  - Design
  - Development
  - Deployment
- **Contract Award and Events**
  - Design
  - Development
  - Deployment
  - System Software Specification (SSS)
  - Software Requirements Review (SRR)
  - Software Design Review (SDR)
- **Deliveries**
  - Prototype (Designate Quantity)
  - Production (Designate Quantity)
- **Developmental Test & Evaluation (DT&E)**
  - Pre-Milestone III:
    - -- Software Development Test (SDT)
    - -- Software Qualification Test (SQT)
    - -- C^3I Interoperability Certification Test
    - -- Logistic Demonstration (LD)
  - Production and Deployment Phase
    - -- Testing to Support PDSS
    - -- C^3I Interoperability Recertification Test
- **Operational Test & Evaluation (OT&E)**
  - Early Operational Assessment
  - Operational Assessment
  - Pre-Milestone III:
    - -- Limited User Test (LUT)
    - -- Initial Operational Test (IOT)
  - Production and Deployment Phase
    - -- Follow-on Operational Test (FOT)
    - -- User Acceptance Test (UAT)
  - As Required
    - -- Supplemental Site Test
    - -- Customer Test (CT)
- **Funding**-- Cumulative by fiscal year
  - O&S -- include all O&S expenditures, not just T&E related
    - -- include Test Articles for DT&E and IOT&E
    - -- include OMA, OMR, and OMNG
  - Procurement--as described in the program Baseline Agreement

Figure 5-4. Critical events for integrated scheduling (IMA programs)

Appendix A
References

Section I
Required Publications

AR 5–11
Army Model and Simulation Management Program (Cited in para 4–5*d*(2).)

AR 25–1
The Army Information Management Program (Cited in para 1–1*b*.)

AR 25–3
Army Life Cycle Management of Information Systems (Cited in para 1–1*b*.) AR 70-1 Army Acquisition Policy (Cited in para 1-1*a*, 1-1*b*.)

AR 73–1
Test and Evaluation Policy (Cited in paras 1–1*c*, 2–1, 3–1, 4–3*b*(1)(*a*), 4–5*b*(4), 5–3*b*(1)(*a*), 5-5*b*(4)(*b*).)

Section II
Related Publications
A related publication is merely a source of additional information. The user does not have to read it to understand this pamphlet.

AR 381–11
Threat Support to U.S. Army Force, Combat and Materiel Development

AR 702–3
Army Materiel Systems Reliability, Availability and Maintainability (RAM)

DFAS–IN Manual 37–100–XX
The Army Management Structure—Fiscal Year XX. For copies of this publication, address requests as follows: DEFENSE FINANCE AND ACCOUNTING SERVICE, ATTN DFAS–I–PA, INDIANAPOLIS IN 46249–1026.

DOD Standard 7935A
DOD Automated Information Systems (AIS) Documentation Standards

DODD 5000.1
Defense Acquisition DODD 8120.1 Life-Cycle Management (LCM) of Automated Information Systems (AISs) DODI 8120.2 Automated Information System (AIS) Life-cycle Management (LCM) Process, Review, and Milestone Approval Procedures

DI–MCCR–80017A
Software Test Report

Section III
Prescribed Forms

This section contains no entries.

Section IV
Referenced Forms

This section contains no entries.

Appendix B
Test and Evaluation Master Plan (TEMP) Checklist
This checklist is intended as a guide to both TEMP developers and TEMP reviewers. The checklist, when properly used, should ensure that all necessary and appropriate requirements in the approved test and evaluation strategy are adequately considered and efficiently addressed in test and evaluation planning and program execution.

B–1. Signature page
a. Does the page contain the necessary signatures for the acquisition category of the program?
b. Is a date at the top of the page?
c. Is there an update number if this is not an initial submission?
d. Is there a revision number if this version contains changes based on comments subsequent to TIWG concurrence from HQDA and/or OSD on reviews?

B–2. TIWG coordination sheet
Are there signature blocks for—
a. Program manager.
b. Combat developer.
c. Developmental tester.
d. Developmental evaluator/assessor.
e. Operational tester.
f. Operational evaluator.
g. Logistician.
h. Threat integrator.
i. Survivability/lethality analyst.
j. Others as required.

B–3. Part I. System Introduction
a. Mission Description.
(1) Mission of the deployed system briefly described?
(2) Does the mission description agree with the mission need statement (MNS) and/or operational requirements document (ORD)?
(3) Is the need defined in terms of mission, objectives, and general capabilities?
(4) Is the MNS referenced and listed in the appendix A (Bibliography)?
b. System Threat Assessment.
(1) Is the system threat briefly described?
(2) Is the operational threat environment summarized from the STAR?
(3) Is the threat at IOC, follow-on at IOC plus 10 and the reactive threat listed?
(4) Is the STAR referenced in appendix A (Bibliography)?
c. Minimum Acceptable Operational Performance Requirements.
(1) Are the critical operational effective and suitability parameters and constraints summarized from the ORD?
(2) Is the ORD referenced and listed in appendix A (Bibliography)?
d. System Description.
(1) System design briefly described?
(2) Key features both hardware and software and subsystems allowing the system accomplishment of operational mission described?
(3) Interfaces with existing or planned systems that are required for mission accomplishments described?
(4) Are critical characteristics of the system or unique support concepts resulting in special test and evaluation requirements listed?
(5) System software, if used, described?
(6) Are existing and/or planned systems of other DOD Components or allies for which inter-operability with this end item is required listed?
(7) Has the description of the overall system included mission critical computer resources (MCCR) for software utilized by the system?
(8) Have key processors, software (including firmware) configuration items, system interfaces, internal and external message standards, and protocols been identified?
e. Critical Technical Parameters.
(1) Critical technical parameters that have been/will be evaluated during all phases of development listed in the matrix?
(2) Accompanying technical threshold listed next to each technical parameter?

(3) Are results from developmental test addressing a given parameter posted?

B–4. Part II. Integrated Test Program Summary

a. Integrated Test Program.

(1) Is an integrated test program presented for the seven major areas of interest?

MILESTONES
ACQUISITION EVENTS
CONTRACT AWARDS AND EVENTS
DELIVERIES
DEVELOPMENTAL TEST AND EVALUATION
LIVE FIRE TEST AND EVALUATION
OPERATIONAL TEST AND EVALUATION

(2) Does the funding data correspond to programmatic forecasts and contain all categories of funding as described in DFAS-IN Manual 37–100–FY?

(a) MRTFB Reimbursable identified?

(b) Research, development, test, and evaluation (RDTE) identified?

(c) Procurement identified?

b. Management.

(1) T&E responsibilities of all participating organizations outlined?

(2) Is the TIWG charter referenced in appendix A (Bibliography)?

(3) Is a clear definition of LRIP and full-rate production provided?

(4) Is the date of the decision to proceed beyond LRIP provided?

(5) Have participating organizations responsible for software T&E been identified?

(6) Are vulnerability and lethality live fire test requirements and operational issues that cannot be addressed before proceeding beyond LRIP explanations provided?

(7) Are responsibilities for configuration management of test articles designated?

(8) Are responsibilities for establishing a HUC designated?

(9) Is the HUC determination that further review is not required documented here, and that document listed in appendix A (Bibliography)?

(10) Do the quantities required for DT&E and IOT&E correspond to those quantities designated in part V?

B–5. Part III. Developmental Test and Evaluation Outline

a. Developmental Test and Evaluation (DT&E) Overview.

(1) Explanation included of how planned DT&E will verify—

(a) Status of engineering design and development

(b) Design risks have been minimized

(c) Achievement of technical performance

(d) Achievement of technical performance

(e) Readiness for IOT

(2) Are technologies identified which have not been demonstrated?

(3) Is the degree to which the system has stabilized been addressed?

(4) Has a discussion of the indicators that will be used to determine software status and evaluate progress toward software maturity in support of key decision points been identified?

(5) Is a narrative "walk-through" of the integrated schedule discussing the interrelationships between tests, developmental, and operational, and between tests and milestones presented?

(6) Are early developmental tests scheduled which will mitigate the technical risks identified in the Integrated Program Summary (annex D)?

(7) Is the Integrated Program Summary referenced in appendix A (Bibliography)?

(8) Are developmental tests, that feed into operational tests or evaluations, identified?

(9) Is a logistics demonstration planned prior to MS III?

(10) Are tests, that validate supportability requirements (that is, technical manuals (TMs) and support packages) identified?

(11) Is the test that will validate the program's requirements against the system specification identified?

(12) Has survivability/lethality testing been highlighted?

b. Developmental Test and Evaluation to Date.

(1) Are the demonstrated technical parameters annotated on critical technical characteristics matrix?

(2) Are reports attesting to this identified in appendix A ("Bibliography")?

(3) Are critical software technical parameters addressed by developmental test and evaluation annotated on the critical technical parameters matrix in part I?

c. Future Developmental Test and Evaluation.

(1) Are developmental tests designated which will demonstrate test item safety; supportability (that is, verify and validate technical manuals and support packages) and that specifications are met?

(2) Are survivability/lethality testing as well as those tests addressing E^3 (electromagnetic environment effects) conventional weapon effects, ECM, ECCM, initial nuclear weapon effects, advanced technology survivability, and NBC contamination identified?

(3) Are test plans and strategies to validate the manufacturing process identified?

(4) Are the following areas addressed throughout the DT&E:

(a) RAM

(b) Survivability

(c) Electromagnetic Capability

(d) Human Factors

(e) System Safety

(f) Health Hazards

(g) Environment

(h) Integrated Logistical Support

(5) Is each test presented in the following format: configuration description; DT&E objectives; DT&E events, scope, basic scenario, and limitations?

(6) Are the differences between the system to be tested and objective system stated for each test?

(7) Are the resources required for each test identified in part V?

(8) Are test and evaluation related exit criteria identified in the Acquisition Decision Memorandum (ADM), addressed?

(9) Are test limitations that significantly affect the developmental evaluation discussed to include software developmental testing or those developmental tests which will incorporate the system's embedded software?

(a) Configuration Management. Have the differences between software functional capabilities of the system to be tested and those of the objective system been identified?

(b) DT&E Objectives. Have software test objectives for this phase of testing been stated? Has the method for software evaluation been discussed?

(c) DT&E Events, Scope of Testing and Basic Scenarios. Have the key planned software development events been identified? Is there a discussion of the analysis, simulations, subsystem tests, and testbeds which are to be used in determining if software DT&E objectives are met? Is there a discussion on software test limitations that may significantly affect the evaluator's ability to draw conclusions and make recommendations concerning software technical parameters?

d. Live Fire Test and Evaluation.

(1) Overall LFT&E strategy reflected?

(2) LFT&E issues identified?

(3) Required levels of system vulnerability /lethality reflected?

(4) Management of LFT&E program identified?

(5) LFT&E schedule reflected?

(6) Funding identified?

(7) Test plans identified?

(8) Requirements reflected?

(9) Related prior and future LFT&E efforts identified?

(10) Evaluation plan identified?

(11) Shot selection process reflected?

(12) Major test limitations identified?

B–6. Part IV. Operational Test and Evaluation (OT&E) Outline

a. Operational Test and Evaluation Overview.

(1) Relationship between program schedule, and so forth, and system requirements, operational issues, and so forth, reflected?

(2) OT evaluation identified?

(3) DT to be used as part of operational evaluation identified?

(4) Simulations/models that will be used to augment OT&E reflected?

(5) Has Logistics support and human performance been addressed?

b. Critical Operational Issues.

(1) Approved critical operational issues listed?

(2) Reference made to approved COICs in appendix A?

c. Operational Test and Evaluation to Date.

(1) Each phase of completed OT&E reflected?

(2) System tested identified?

(3) Summary of testing that occurred reflected?

(4) Is a summary of what has been learned as a result of OT&E about the hardware/software maturity been discussed?

(5) Are the differences between the tested hardware/software, hardware/software planned for the current phase, hardware/software to be deployed, and the importance of these differences been discussed?

d. Future Operational Test and Evaluation. Evaluations/assessments listed as well as tests?

(1) *Configuration Description.*

(a) Are differences described between tested system and the system to be fielded?

(b) Is the extent of integration with other systems reflected?

(c) Is the system characterized?

(d) Has the software and hardware configuration for each test been identified?

(e) Has the degree to which test results from this configuration represent performance of the deployed system been identified?

(2) *OT&E Objectives.*

(a) Are test objectives including the critical operational issues to be addressed by each phase of OT&E and the decision milestone(s) stated?

(b) If a beyond LRIP decision is being supported are test objectives that examine all areas of operational effectiveness and suitability reflected?

(c) Has the relationship between OT&E objectives and software characteristics which affect critical operational issues been addressed?

(3) *OT&E Events, Scope of Testing, and Scenarios.*

(a) Scenarios summarized?

(b) Events to be conducted identified?

(c) Type of resources to be used reflected?

(d) Simulation(s)/models to be employed identified?

(e) Type of representative personnel who will operate and maintain the system reflected?

(f) Status of the logistic support reflected?

(g) Operational and maintenance documentation that will be used identified?

(h) Environment under which the system is to be employed and supported during testing reflected?

(i) Planned sources of information reflected?

(j) Has the relationship between software functions being tested and test scenarios been discussed?

(k) Have load levels to be used and their relationship to the required operational environment been identified?

(4) *Limitations.*

(a) Are test limitations discussed that may impact the resolution of affected critical operational issues?

(b) Are critical operational issues affected indicated in parentheses after each limitation?

(c) Have any factors which may inhibit realistic OT of the hardware/software been identified?

(d) Have constraints been identified along with their impact on critical operational issues which impose on software maturity or availability of resources and simulators?

B–7. Part V. Test and Evaluation Resource Summary

Is a summary of all key T&E resources (Government and contractor) provided? Are Major Range and Test Facility Base resources identified?

a. Test Articles.

(1) Are actual number and timing requirements listed?

(2) Are key subsystems to be tested separately and their quantities identified?

(3) Are prototype, development pre-production, or production model use identified?

b. Test Site and Instrumentation.

(1) Are specific test range/facility needs identified?

(2) Are planned test range/facility needs identified as compared with existing and programmed capabilities?

(3) Are new instrumentation acquisitions specified?

c. Test Support Equipment.

(1) Is specifically acquired equipment identified?

(2) Are unique/special calibration requirements indicated?

d. Threat Systems/Simulators.

(1) Type/number/availability identified?

(2) Are requirements identified as compared with available and projected assets and their capabilities?

(3) Major shortfalls identified?

(4) Use Accredited?

e. Test Targets and Expendables.

(1) Type/number/availability identified for each phase of testing?

(2) Major shortfalls identified?

(3) Threat targets for LFT&E identified?

(4) Threat munitions/systems for LFT identified?

f. Operational Force Test Support. Type and timing of aircraft flight hours, and so forth, identified for each phase?

g. Simulations, Models and Testbeds.

(1) System simulations required identified for each phase?

(2) Rationale for usage/application explained?

(3) Accreditation Plan prepared?

h. Special Requirements. Significant non-instrumentation capabilities and resources discussed?

i. Test and Evaluation (T&E) Funding Requirements.

(1) FY and appropriation line number reflected?

(2) Funding required to pay direct costs identified?

(3) Funding currently appearing in those lines indicated?

(4) Major shortfalls identified?

j. Manpower/Personnel Training Limitations. Manpower/personnel training limitations that affect test execution identified?

B–8. Appendix A ("Bibliography")

a. Reports documenting developmental and operational T&E reflected?

b. Appendix B ("Acronyms").

c. Appendix C ("Points of Contact").

d. Annexes or Attachments.

B–9. B-9. Annex 1

COEA / COIC / MAOPR / CTP Crosswalk.

Glossary

Section I
Abbreviations

ACAT
acquisition category

ADM
acquisition decision memorandum

AMC
Army Materiel Command

AMSAA
Army Materiel Systems Analysis Activity

APB
acquisition program baseline

AS
acquisition strategy

BLRIP
beyond low rate initial

BMDO
Ballistics Missile Defense Organization

CDR
critical design review

CE
continuous evaluation

CEP
concept evaluation program

COEA
cost and operational effectiveness analysis

COI
critical operational issues

COIC
critical operational issues and criteria

CRLCMP
computer resources life cycle management

CT
customer test

CTP
critical technical parameters

DAB
Defense Acquisition Board

DCSOPS
Deputy Chief of Staff for Operations and Plans

DDN
Defense Data Network

DISC4
Director of Information Systems for Command, Control, Communications, and Computers

D,OT&E
Director, Operational Test and Evaluation

DT
developmental testing

DT&E
development test and evaluation

D,T&E
Director, Test and Evaluation

DUSA(OR)
Deputy Under Secretary of the Army (Operations Research)

E3
electromagnetic and environmental effects

ECCM
electronic counter-countermeasures

ECM
electronic countermeasures

EDT
engineering development test

EMD
engineering and manufacturing development

EUE
early user experiment

EUT
early user test

FAT
first article test

FD
functional description

FDE
force development experiment

FDT
force development test

FDTE
force development testing and experimentation

FOC
full operational capability

FOT
follow-on operational test

FOT&E
follow-on test and evaluation

FP
functional proponent

FRP
full rate production

FYTP
Five Year Test Program

HLFD
high level functional description

HUC
Human Use Committee

IMA
information mission area

IOC
initial operational capability

IOT
initial operational test

IPR
in-process review

IPS
integrated program summary

JCS
Joint Chiefs of Staff

LD
logistic demonstration

LFT
live fire test

LFT&E
live fire test and evaluation

LRIP
low-rate initial production

LUT
limited user test

MAISRC
Major Automated Information Systems Review Council

MAOPR
minimum acceptable operational performance requirements

MCCR
mission critical computer resources

MNS
mission need statement

MOEs
measures of effectiveness

MOP
measures of performance

MP
management plan

MRTFB
Major Range and Test Facility Base

MS
milestone

NBC
nuclear, biological, chemical

OMA
operations and maintenance-Army

OMNG
operations and maintenance-National Guard

OMR
operations and maintenance-Reserves

OPTEC
Operational Test and Evaluation Command

ORD
operational requirements document

OSD
Office, Secretary of Defense

OT
operational testing

OT&E
operational test and evaluation

OTP
Outline Test Plan

OUSD(A&T)
Office of the Under Secretary of Defense (Acquisition and Technology)

PDSS
post deployment software support

PEO
program executive officer

PI
program integrator

PM
program manager/project manager

PPQT
pre-production qualification test

PPT
production prove-out test

PVT
production verification test

RFP
request for proposal

SDP
system decision paper

SDR
software design review

SDT
software development test

SQT
software qualification test

SRR
system requirements review

SSS
system software specification

STA
system threat assessment

STAR
System Threat Assessment Report

STO
system threat objective

T&E
test and evaluation

TECNET
Test and Evaluation Community Network

TECOM
Test and Evaluation Command

TEMA
U.S. Army Test and Evaluation Management Agency

TEMP
Test and Evaluation Master Plan

TFT
technical feasibility test

TIWG
test integration working group

TMDE
test measurement and diagnostic equipment

TRADOC
Training and Doctrine Command

UAT
user acceptance test

USASSDC
U.S. Army Space and Strategic Defense Command

VTC
video teleconference

Section II
Terms

Battle lab
A process established by the U.S. Army Training and Doctrine Command to identify, develop, and experiment with new capabilities offered by emerging technologies. It encourages experimentation via simulations or prototypes, using real soldiers and real units to determine technology insertion or new requirements.

Combat developer
Command or agency that formulates doctrine, concepts, organization, materiel requirements, and objectives.

Concept evaluation program
Concept evaluation programs (CEPs) provide U.S. Army Training and Doctrine Command commanders, battle labs, and combat developers with a quick reaction and simplified process to resolve combat development, doctrinal, and training issues, and to solidify combat development requirements and support early milestone decisions. In addition, CEP tests are used to provide an experimental database for requirements documents and to expedite the materiel acquisition process; however, CEP tests are not to be used as the primary tests to support decision review production decisions. CEP tests may be conducted at any time to support the continuous evaluation process.

Continuous evaluation
A process that provides the continuous flow of information regarding system status, including planning, testing, data compilation, analysis, evaluation, conclusions, and reporting to all members of the acquisition team from the drafting of the initial mission need statement through deployment reviews and assessment. Continuous evaluation will be performed by all members of the acquisition team.

Critical operational issues and criteria
The operational effectiveness and operational suitability concerns, including scope, criteria, and rationale, that must be examined to determine the degree to which the system is capable of performing its mission. The critical operational issues and criteria (COIC) continually focus on the milestone III decision.

Customer test
A test conducted by U.S. Army Operational Test and Evaluation Command (OPTEC) for a requesting agency external to USAOPTEC. The requesting agency coordinates support requirements and provides funds and guidance for the test. It is not directly responsive to Army program objectives and is not scheduled or approved by the Test Schedule and Review Committee (TSARC) unless external sources are required for test support.

Developmental test
A generic term encompassing engineering-type tests used to verify the status of technical progress, verify that design risks are minimized, substantiate achievement of contract technical performance, and certify readiness for initial operational test. Developmental tests generally require instrumentation and measurements and are accomplished by engineers, technicians, or soldier operator-maintainer test personnel.

Developmental tester
The command or agency that plans, conducts, and reports the results of Army developmental testing. Associated contractors may perform technical testing on behalf of the command or agency.

Early user test and experimentation
Testing or experimentation that employs user personnel during the proof of principle (or

demonstration-validation) phase before entering development-production prove-out or full-scale development. The purposes are to test a materiel concept, to support planning for training and logistics, to identify interoperability problems and future testing requirements, and to provide data for an operational evaluation to support the milestone I or II decision. A specific test or experiment during early user test and experimentation (EUTE) may be a concept evaluation program, innovative test, force development test and experimentation, operational feasibility test, or other test as appropriate.

Electromagnetic environmental effects
The impact of the electromagnetic environment on the operational capability of military forces, equipment, systems, and platforms. These effects encompass all electromagnetic disciplines, including electromagnetic compatibility; electromagnetic interference; electromagnetic vulnerability; electromagnetic pulse; electronic counter-countermeasures; hazards of electromagnetic radiation to personnel, ordnance, and volatile materials; and natural phenomena effects of lightning and p- static.

Engineering development test
A developmental test conducted postmilestone I and premilestone II to provide data on safety, the achievability of critical technical parameters, and refinement and "ruggedization" of hardware configurations, and to determine technical risks. Engineering development testing is performed on components, subsystems, materiel improvement, nondevelopmental items (NDIs), hardware-software integration, and related software. Engineering development tests (EDTs) include the testing of compatibility and interoperability with existing or planned equipment and systems and the system effects caused by natural and induced environmental conditions during the development phases of the materiel acquisition process. The program funding category is 6.3.

Follow-on operational test
A test conducted during and after the production phase to refine information obtained during the initial operational test, to provide data to evaluate changes, and to provide data to reevaluate the system to ensure that it continues to meet operational needs.

Force development testing and experimentation
The testing conducted early to support the force development and materiel development processes by examining the effectiveness of existing or proposed concepts of training, logistics, doctrine, organization, and materiel. Force development test and experimentation (FDTE) examinations are conducted early and can be scheduled as needed during any phase of the materiel acquisition process. They may be related to, combined with, or used to supplement operational testing. During the requirement formulation effort, FDTE may be used to determine essential and desirable capabilities or characteristics of proposed systems. Before milestone II, FDTE will be used to assist in refining concepts of employment, logistics, training, organization, and personnel and in lieu of early operational testing when operational issues are adequately addressed. Force development test and experimentation evaluations also include field experiments designed to gather data through instrumentation to address a training development problem or to support simulations, models, war games, and other analytical studies. Requirements for research, development, test, and evaluation may also be generated by the results of combat developments, training developments, or training effectiveness analysis testing and studies.

Functional proponent
The functional proponent is a command, Army Staff element, or agency that establishes and documents system requirements, critical operational issues and criteria, and test support packages for information systems and formulates the concepts explaining the intended use of the system.

Independent developmental evaluator
A command or agency independent of the project manager or developing subordinate command that conducts developmental evaluations of Army systems, normally the U.S. Army Management Systems Support Agency, U.S. Army Test and Evaluation Command, or U.S. Army Information Systems Command.

Independent evaluation
The process used by the independent evaluators to independently determine if the system satisfies the approved requirements. It will render an assessment of data from all sources, simulation, and modeling, and an engineering or operational analysis to evaluate the adequacy and capability of the system.

Independent operational evaluator
A command or agency independent of the materiel developer and the user that conducts operational evaluations of Army systems, normally the U.S. Army Operational Test and Evaluation Command.

Initial operational test
The dedicated field test, under realistic combat conditions, of production or production-representative items of weapons, equipment, or munitions for the purpose of determining operational effectiveness and suitability for use by representative military or civilian users.

Instrumentation
The electromagnetic (for example, electrical, electronic, laser, radar, photosensitive) and other equipment (for example, optical, electro-optical, audio, mechanical, automated information) that is used to detect, measure, record, telemeter, process, or analyze physical parameters or quantities encountered in the test and evaluation process. Instrumentation may apply to a system under test or to a target or threat simulator.

Limited user test
Any type of research, development, test, and evaluation funded operational test conducted between milestone II and milestone III other than the initial operational test. The limited user test (LUT) normally addresses a limited number of operational issues. The LUT may be conducted to provide a data source for operational assessments in support of low-rate initial production (LRIP) decisions and for reviews conducted before the initial operational test (IOT). The LUT may be conducted to verify fixes to problems discovered in IOT that must be verified prior to milestone III (that is, the fixes are of such importance that verification cannot be deferred to the follow-on operational test (FOT)).

Logistic demonstration
A logistic demonstration evaluates the achievement of maintainability goals; the adequacy and sustainability of tool, test equipment, selected test programs sets, built-in test equipment, associated support items of equipment, technical publications, maintenance instructions, trouble-shooting procedures, and personnel skill requirements; the selection and allocation of spare parts, tools, test equipment, and tasks to appropriate maintenance levels; and the adequacy of maintenance time standards.

Logistician
The logistician, in support of test and evaluation (T&E), is an Army command or agency that conducts the logistic evaluation of systems being acquired and assures that logistics are adequately addressed in the Test and Evaluation Master Plan (TEMP) and detailed test plans.

Materiel developer
The Research, Development, and Acquisition command, agency, or office assigned responsibility for the system under development or being acquired.

Operational effectiveness
The overall degree of mission accomplishment of a system when used by representative personnel in the environment planned or expected (for example, natural, electronic, threat, and so forth) for operational employment of the system considering organization, doctrine, tactics, survivability, vulnerability, and threat (including countermeasures; initial nuclear weapons effects; and nuclear, biological, and chemical contamination threats).

Operational suitability
The degree to which a system can be satisfactorily placed in field use with consideration given to availability, compatibility, transportability, interoperability, reliability, wartime usage rates, maintainability, safety,

human factors, manpower supportability, logistic supportability, and training requirements.

Operational test
A generic term that encompasses the range of testing and experimentation conducted in realistic operational environments and with users that are representative of those expected to operate, maintain, and support the system when fielded or deployed.

Operational tester
A command or agency that plans, conducts, and reports the results of operational testing. The operational tester is normally the U.S. Army Operational Test and Evaluation Command.

Preproduction prototype
An article in final form employing standard parts and representative of articles to be produced on a production line with production tooling.

Production prove-out test
A developmental test conducted postmilestone II or postmilestone I or II (under the Army streamlined acquisition process concept) before production testing with prototype hardware. This test is usually performed at subsystem level and provides data on safety, the achievability of critical system technical characteristics, refinement and ruggedization of hardware configurations, and determination of technical risks. Program funding category is 6.4.

Production qualification test
A system-level developmental test conducted postmilestone II or combined postmilestones I and II test that ensures design integrity over the specified operational and environmental range. This test usually uses prototype or preproduction hardware fabricated to the proposed production design specifications and drawings. Such tests include contractual reliability and maintainability demonstration tests required before production release.

Production verification test
A system-level developmental test conducted postmilestone III to verify that the production item meets critical technical parameters and contract specifications, to determine the adequacy and timeliness of any corrective actions indicated by previous tests, and to validate the manufacturer's facilities, procedures, and procedures. This test may take the form of a first-article test if such testing is required in the technical data package for quality assurance purposes to qualify a new manufacturer or procurements from a previous source out of production for an extended period and to produce assemblies, components, or repair parts in accordance with requirements of the technical data package.

Program executive officer
The program executive officer provides the overall management of the test and evaluation (T&E) activities of assigned systems.

Program manager
A Headquarters, Department of the Army, board selected manager (military or civilian) of a system or program. A program manager may be subordinate to either the Army acquisition executive, program executive officer, or a materiel command commander.

Realistic test environment
The conditions under which a system is expected to be operated and maintained, including the natural weather and climatic conditions, terrain effects, battlefield disturbances, and enemy threat conditions.

Software development test
Formal tests conducted by the software developer and the proponent agency to ensure that the technical and functional objectives of the system are met. These tests consist of program or module and cycle or system levels of testing. The unit or module test is the initial testing level. Testing is executed on local testbed hardware, and benchmark test files are used. This testing provides data to assess the effectiveness of the instruction code and economy of subroutines for efficient processing. It also ensures that input and output formats, data handling procedures, and outputs are produced correctly. The cycle or system test involves testing the combination of linkage of programs or modules into major processes.

Software qualification test
A system test conducted by the developmental tester using live-data files supplemented with user-prepared data and executed on target hardware. The objectives of the software qualification test are to obtain Government confirmation that the design will meet performance and operational requirements and to determine the adequacy and timeliness of any corrective action indicated by previous testing.

System
An item or group of items that consists of materiel and/or software which when put in the hands of users will enable users to accomplish their assigned missions.

Targets
Expandable devices used for tracking and/or engagement by missiles/munitions in support of T&E as well as training missions. Drone targets are air or ground vehicles converted to remote or programmable control. Ground targets are intended to represent an adversary ground vehicle system or ground based military structure. Aerial targets are intended to represent adversary aircraft. Targets may represent only selected adversary system characteristics.

Technical feasibility test
A developmental test conducted postmilestone 0 and premilestone I or milestone I or II (under the Army streamlined acquisition process concept) to assist in determining safety and establishing system performance specifications and feasibility. Program funding category is 6.3.

Test instrumentation
Test instrumentation includes scientific or technical equipment used to measure, sense, record, transmit, process text, or display data during materiel testing and examination; equipment used to create test environments representative of natural and battlefield conditions; simulators or system simulators used for measuring or depicting threat or training, teaching, and proficiency during testing; or targets used to simulate threat objects when destruction of real objects is not practical.

Test Integration Working Group
A working group chaired by the program manager for a system with the purpose of optimizing the use of test and evaluation (T&E) expertise, instrumentation, facilities, simulations, and models to achieve test integration, thereby reducing costs to the Army. The Test Integration Working Group (TIWG) ensures that T&E planning, execution, and reporting are directed toward common goals.

Test resources
A collective term that encompasses all elements necessary to plan, conduct, collect, or analyze data from a test event or program. Elements include test funding and support manpower (including travel costs), test assets (or units under test), test asset support equipment, technical data, simulation models, testbeds, threat simulators, surrogates and replicas, special instrumentation unique to a given test asset or test event, targets, tracking and data acquisition, instrumentation, and equipment for data reduction, communications, meteorology, utilities, photography, calibration, security, recovery, maintenance and repair, frequency management and control, and base or facility support services.

Threat simulator
A generic term used to describe equipment which represents adversary systems. A threat simulator has one or more characteristics that, when detected by human senses or man-made sensor, provide the appearance of an actual adversary system with a prescribed degree of fidelity. Threat simulators are not normally expendable.

Trainer
The trainer, in support of test and evaluation, is an Army command or agency that trains personnel to operate and maintain systems during testing.

User acceptance test
A test conducted by the functional proponent or combat developer. It is limited in scope relative to a follow-on operational test with the primary purpose of verification of the

functionality of the changes to the information system in the user environment.

Section III
Special Abbreviations and Terms

This section contains no entries

Index

This index is organized alphabetically by topic and subtopic. Topics and subtopics are identified by paragraph number.

Applicability, 1–1

Capstone TEMP, 2–3*d*

Cost and operational effectiveness analysis (COEA) interface, 2–5

Format and contents for information mission area programs
- Appendixes, 5–7
- General, 5–1
- Part I—System Introduction, 5–2; critical system characteristics, 5–2*d*; interfaces, 5–2*d*; key features, 5–2*d*; minimum acceptable operational performance requirements, 5–2*c*; mission description, 5–2*a*; system description, 5–2*d*; system threat assessment, 5–2*b*; technical parameters, 5–2*e*
- Part II—Integrated Test Program Summary, 5–3; integrated test program schedule, 5–3*a*; management, 5–3*b*
- Part III—Developmental Test and Evaluation Outline, 5–4; configuration description—developmental, 5–4*c*(3); operational, 5–5*d*(4); events— developmental, 5–4*c*(5); operational, 5–5*d*(6); future test and evaluation— developmental, 5–4*c*; operational, 5–5*d*; live fire test and evaluation, 5–4*d*; objectives— developmental, 5–4*c*(4); operational, 5–5*d*(5); overview— developmental, 5–4*a*; operational, 5–5*a*; scenarios— developmental, 5–4*c*(5); operational, 5–5*d*(6); scope— developmental, 5–4*c*(5); operational, 5–5*d*(6); test and evaluation to date— developmental, 5–4*b*; operational, 5–5*c*; test limitations, 5–5*d*(7)
- Part IV—Operational Test and Evaluation Outline, 5–5; critical operational issues, 5–5*b*;
- Part V—Test and Evaluation Resource Summary, 5–6; expendables, 5–6*e*; funding, 5–6*i*; models, 5–6*h*; operational force test support, 5–6*f*; simulations, 5–6*g*; special requirements, 5–6*h*; targets, 5–6*e*; test articles, 5–6*a*; testbeds, 5–6*i*; test instrumentation, 5–6*b*; test sites, 5–6*b*; test support equipment, 5–6*c*; threat systems/simulators, 5–6*d*; training, 5–6*j*
- Signature page, 5–1c
- Tailoring, 2–4; 2–6
- TIWG coordination sheet, 5–1d

Format and contents for materiel systems
- Appendixes, 4–7
- General, 2–4; 4–1
- Part I—System Introduction, 4–2; critical technical parameters, 4–2*e*; 4–4*b, c*; minimum acceptable operational performance requirements, 4–1; 4–2*c*; mission description, 4–2*a*; system description, 4–2*d*; system threat assessment, 4–2*b*
- Part II—Integrated Test Program Summary, 4–3; integrated test program schedule, 4–3*a*; management, 4–3*b*
- Part III—Developmental Test and Evaluation Outline, 4–4; configuration description— developmental, 4–4; operational, 4–5*d*; events— developmental, 4–4; operational, 4–5*d*; future test and evaluation— developmental, 4–4*c*; operational, 4–5*c*; live fire test and evaluation (LFT&E), 4–4*d*; objectives— developmental, 4–4; operational, 4–5*d*; overview— developmental, 4–4*a*; operational, 4–5*a*; scenarios— developmental, 4–4; operational, 4–5*d*; scope— developmental, 4–4; operational, 4–5*d*; test and evaluation to date— developmental, 4–4*b*; operational, 4–5*c*
- Part IV—Operational Test and Evaluation Outline, 4–5; critical operational issues (COI), 4–5*b*; operational test limitations, 4–5*d*
- Part V—Test and Evaluation Resource Summary, 4–6; expendables, 4–6*e*; funding, 4–6*i*; models, 4–6*g*; operational force test support, 4–6*f*; simulation, 4–6*g*; special requirements, 4–6*h*; targets, 4–6*e*; test articles, 4–6*a*; testbeds, 4–6*g*; test instrumentation, 4–6*b*; test sites, 4–6*b*; test support equipment, 4–6*c*; threat systems/simulators, 4–6*d*; training, 4–6*j*
- Signature page, 4–1
- Tailoring, 2–4; 2–6
- TIWG coordination sheet, 4–1

Mission critical computer resources, 4–2(d)

OSD T&E Oversight, 2–10; 2–12

Purpose, 1–1

References, 1–2

Test and Evaluation Master Plan (TEMP)
- Capstone, 2–3d
- Checklist, 2–3
- Development, chapter 2, section III
- Exceptions, 2–1
- General procedures, 2–1
- Input, 2–7
- Length, 2–3c
- Need for, 2–2
- Non-Major Systems, chapter 2–section II
- Tailoring, 2–4; 2–6
- Outline, 4–1
- Preliminary, 2–9
- Preparation of, 2–3
- Preparation, review and approval process, chapter 3
- Principal responsibilities, 3–2; combat developer, 3–2*b*; independent developmental evaluator/assessor and developmental tester, 3–2*c*; independent operational evaluator and operational tester, 3–2*d*; program manager, 3–2*a*
- Publication considerations, 2–17
- Required for, 2–1
- Review and approval process— ACAT I and OSD T&E oversight programs, 3–6; ACAT II and Army Special Interest, 3–10; ACAT III and IV and Class II-IV IMA, not OSD oversight, 3–12; BMDO Programs, 3–7; general, 3–5; MAISRC, OSD oversight, 3–13; multi-Service ACAT II programs—Army lead, 3–11; multi-Service, ACAT I and OSD oversight, Army participant, 3–9; multi-Service, ACAT I and OSD oversight, Army lead, 3–8
- Revision procedures, 2–15
- Signature page, 2–14; 2–15; 4–1; 5–4
- Strawman, 2–3; 2–8
- Submission, 2–11; delay of, 2–16; documentation, 2–18
- Update, chapter 2, section IV; deferral, 2–13; not required for, 2–13; procedures, 2–14

Test integration working group (TIWG), 2–3
- Chartering, 3–1
- Composition, 2–7
- Coordination process, 3–3
- Coordination sheet, 2–14; 2–15; 4–1; 5–1
- Issue resolution, 3–3
- Meeting alternatives, 3–4
- Member authority, 3–3
- Responsibilities, 3–3

USAPA

ELECTRONIC PUBLISHING SYSTEM
TEXT FORMATTER ... Version 2.45

PIN:	074668–000
DATE:	06-01-99
TIME:	09:08:16
PAGES SET:	60

DATA FILE:	e40.fil
DOCUMENT:	DA PAM 73–2
DOC STATUS:	NEW PUBLICATION